CrustBuster
SPEED KING INC.

4000 SERIES

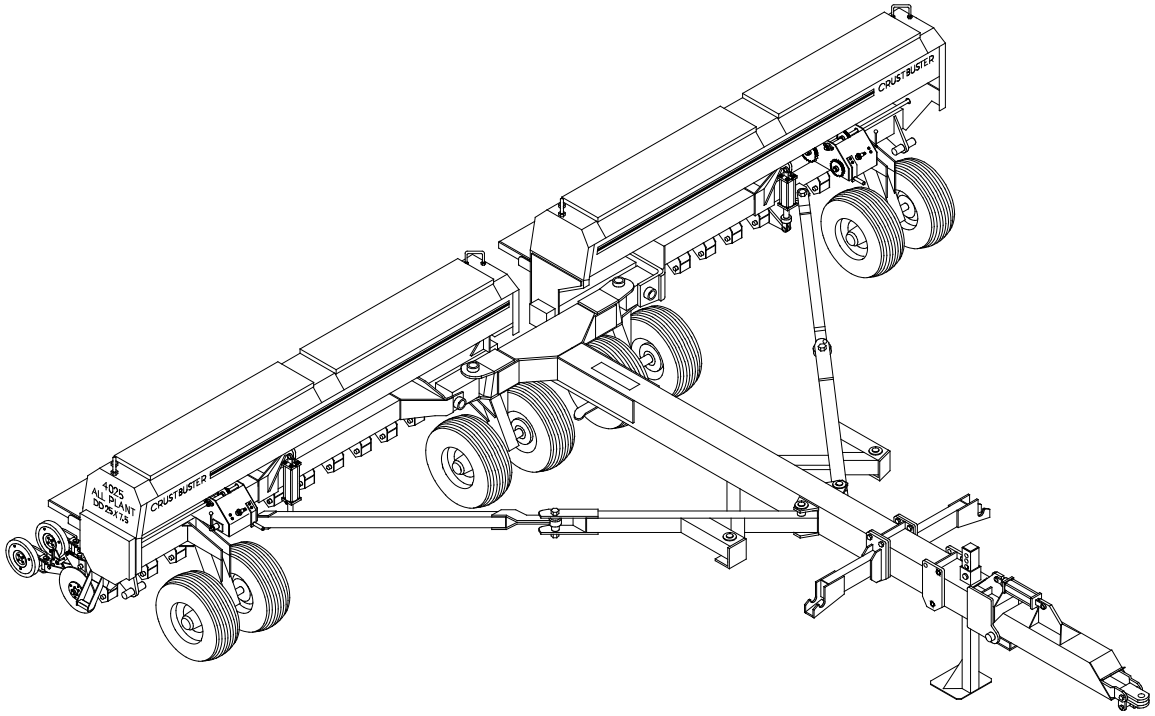

ALL PLANT & MIN – TILL DRILL

OWNER'S MANUAL ADDENDUM

OPERATION • MAINTENANCE • REPAIR PARTS

#608869 (03-08)

Table of Contents

Precision Planting Metering System **5-9**
- Precision Planting Introduction 5
- Precision Meter Parts List 6
- Precision Meter Operating Tips 7
- Precision Meter Troubleshooting Guide 8
- Operating Tips and Warnings 9

Dickey-John Metering System **10-11**
- Quick Setup Guide 10
  - Programming 10
  - Display Features 10
- System Component Installation 11

Singulator Removal and Conversion **12-13**

4000 Series Sprocket Locations **15**

Seeding Rates **16-18**

4030 Planter Drill Repair Parts **19-35**
- 4030 Right Wing Section – Planter Drill 20
- Planter Meter Mount Assembly – Long 21
- Planter Meter Mount Assembly – Short 22
- Drill Feed Tube Parts to Reg. Drill 23
- Planter Drill Feed Tube 24
- Planter Drill Feed Tube – Short 25
- Planter Drill Drive Repair Parts 26-27
- Planter Drill Corn Box Repair Parts 28
- Planter Drill Opener Repair Parts 29-30
- Planter Drill Feed Tube – Long 31
- Blade Assembly – Plain 16” (4mm) Repair Parts 32
- Finger Tine Cover Assembly 33
- Planter Idler Arm Assembly 34
- 7/8” Hex Bearing Mount Assembly 34
- 4030 Left Wing Section – Planter Drill 35

Repair & Maintenance Tips **37-43**

Congratulations,
on your new PrecisionMeters™
from Precision Planting®.



These meters are the heart of your planter. They can be the difference between a good year and a great year. They are precision instruments that should be handled with care.

Your meters have been tested at a general setting, we recommend that you have your meters calibrated to your specific seed type and planting speed by a certified MeterMax® representative. Call us or visit our website at **ww.precisionplanting.com** to find your closest MeterMax® representative.

Your meter has our adjustable brush. It has been pre-set to the optimum setting for most seed sizes. Some basic guidelines for adjusting your brush are included on the back side of this sheet. If you take your meters to a MeterMax® technician, they will provide you with a specific recommendation on a brush setting for each seed you plant.

From Keeton® Seed Firmers to the PrecisionMeter™, my goal is to help you achieve maximum profitability by maximizing your planter's performance. If you have any questions, please give us a call.

Sincerely,

Gregg A. Sauder
Precision Planting®

955006

PRECISION METER™

Parts List

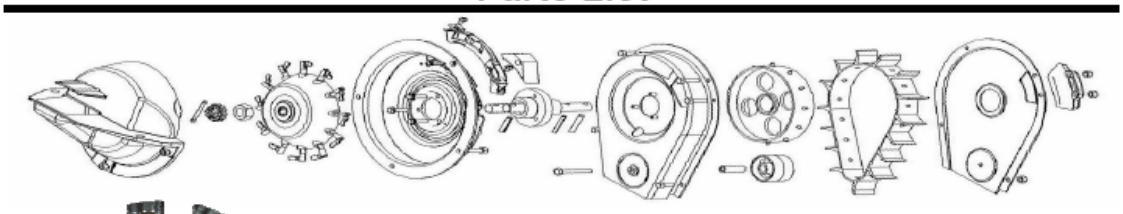



Precision Finger Set

The Precision Finger Set provides an improved finger along with a sturdier finger holder to accurately plant a wide range of seed sizes.



Population Max™ Backing Plate

The Population Max backing plate is equipped with an "A" insert. There are two other inserts that can be used. Before changing to a different insert, please consult with a MeterMax® representative for a recommendation.

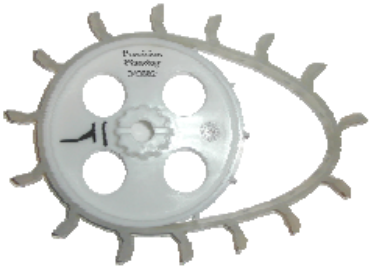



SureFire® Belt

The SureFire® Belt assures every seed is delivered to the center of the seed tube to help spacing along with seed delivery.

Adjustable Brush

The Adjustable Brush provides additional flexibility to accommodate a wide range of seed sizes. Use the "T" handle that is attached to rotate the brush into position. Follow these general guidelines to adjust the brush position to your seed size and shape. Adjusting the brush to match seed size is simple – adjust the brush counterclockwise for larger seed and clockwise for smaller seed.





Skip Stop™

The Skip Stop helps prevent skips by using a soft rubber pad to absorb the force of the seed leaving the finger.



Continued On Other Side.

Precision PLANTING

Questions? Check the website: www.precisionplanting.com or call us at 309-925-5050.

955006

343022, 343025, 343030

PRECISIONMETER™

Operating tips

1) Test on MeterMax® Test Stand for maximum performance and correct brush setting with your seed.
2) Always use graphite when using seed treatments. (1-2 tbs per bag)
3) Optimum planting speed is 4 ½ to 5 miles per hour. Excess speed results in poor spacing performance and improper depth control.
4) Check bristles on brush occasionally for wear
5) Be cautious in using seed treatments and additives. They can cause meter performance problems, premature wear, and increased debris build up on meter parts.
6) Fine-tune your planter by checking all key components including: Seed Firmers, seed tubes,chains, sprockets, tire pressure, seed monitor, double disk openers, gauge wheels, closing wheels, parallel arms, and the row unit itself.
7) Check brush lever and adjust as necessary

The Adjustable Brush is made up so the #3 position is equivalent to a standard brush. This position will work well for medium sized seeds. For larger or smaller seed, the lever can be adjusted by rotating left or right to fine tune the meter's performance. See chart or sticker for details on where your brush should be set.

If meter is under-planting adjust left. ⇦
If meter is over-planting adjust right. ⇨

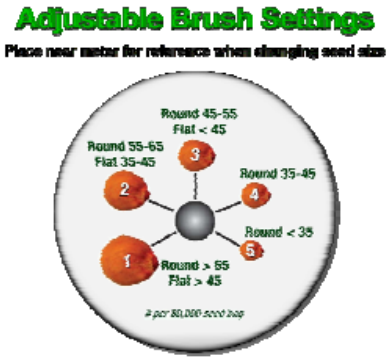

Annual Maintenance

Precision Finger Meters™ should be inspected and maintained annually.

1) Remove black plastic cover and clean out debris from meter
2) Wipe seed treatment build up from fingers and backing plate with damp cloth.
3) Inspect springs and fingers for damage or wear.
   a) The primary wear spot on a finger is the inner heel, where it rubs on the backing plate.
   b) Replace fingerset if flat spot exceeds 1/16" across
4) Inspect backing plate and replace if insert wear is apparent on the action sights to the left of brush.
5) Inspect brush and replace annually or every 75-100 acres per row. (Brush part # 343040)
   a) Only use a Precision Planting Adjustable Brush or maroon colored brush in Precision Meters, other brushes are too stiff and will increase skips.
6) Inspect SkipStop by looking through exit hole in backing plate, for trapped debris and wear.
7) Examine belt housing for dents or rough edges at bottom of meter.
8) Check each flight of belt for damage from obstructions or rodents.
9) Replace belt if it has damaged flights, feels inflexible or is more than 3 years old..
10) Check plastic cover for damage or cracking.
11) Test meters on MeterMax® Test Stand to insure good performance and proper brush setting.

Note: Do not use solvent based lubricants such as WD-40 on finger meters.

Storage

1) Before storing meters, remove all seed and blow residue and debris out of meter.
2) Rotate meter so all flights are hidden within belt housing to protect from damage.
3) Do not store meters so that seeds can lay on SkipStop.
4) Store in dry, rodent free container.

Questions? Check the website: www.precisionplanting.com or call us at 309-925-5050. Precision PLANTING

343022, 343025, 343030

PRECISIONMETER™

Troubleshooting Guide

Problem	Solution
Meter does not deliver correct population.	1 ► Check for debris or build up in meter. 2 ► Check nut tension of fingerset. 3 ► Adjust brush setting for seed size. 4 ► Add graphite or reduce graphite.
Poor spacing of seed.	1 ► Verify SureFire belt is installed in the right direction. 2 ► Make sure seed hopper is correctly aligned onto row unit. 3 ► Check for debris in meter or belt. 4 ► Check for obstruction in seed tube.
Finger set tightens up when running.	1 ► Housing may be out of tolerance. - Lay a 6" straight edge across the finger contact surfaces on the PopMax while installed on the belt housing. - If the center ring is higher than the outside ring, the belt housing is flawed and needs to be replaced.
Finger set torque is uneven and alternates from tight to loose.	1 ► Backing plate is not secured tightly to belt housing. 2 ► Belt housing or finger holder is warped. 3 ► Drive wheel is warped or belt is rubbing in belt housing. 4 ► Bearing is not seated properly on belt housing.
Finger does not follow contours of action sight	1 ► Check for damaged or improperly assembled springs & fingers. 2 ► Cam is not engaged on bearing.
SureFire Belt will not center in belt housing.	1 ► Drive wheel wobbles on shaft. 2 ► Belt housing is warped. 3 ► Belt is warped and does not track straight.
Finger catches when rotated toward exit hole.	1 ► Cam is not engaged on bearing. 2 ► Check for damaged finger.
Belt rubs SkipStop pad.	1 ► Make sure pad is laying flat in plastic housing. 2 ► Pad should be glued on two sides and bottom edge. 3 ► Make sure edges of pad are trapped by backing plate.
SkipStop is "bubbled up" in middle, causing belt to rub on pad.	1 ► Carefully lift top edge and release trapped air from behind pad. 2 ► If bubble does not disappear, replace SkipStop pad.
SkipStop has a recessed pocket where seed hits.	1 ► If recess is deeper than seed, replace SkipStop.

Always pay attention to your seed monitor, operating manual, and the amount of seed you are planting compared to your expectations. Always investigate abnormalities!

Warranty

Precision Planting®, Inc. warrants this product to be free from defects in material or workmanship during the first year of service. The use of seedbox treatments voids this warranty. Our obligation under this warranty shall be limited to repairing or replacing, free of charge to the original purchaser, any part that in our judgment shall show evidence of such defect, provided further that such part shall be returned within thirty (30) days from the date of failure – routed through the dealer from whom the purchase was made. Shipping charges prepaid.

Questions? Check the website: www.precisionplanting.com or call us at 309-925-5050.

Precision PLANTING

Precision™ Meter Operating Tips

Your meters have been tested to ensure that they pass our quality standards. These tests are conducted using a medium flat seed and the "A" insert. Your seed size and shape will be different and can change meter performance. For optimum performance, have your meters calibrated with your seed by a MeterMax® technician.

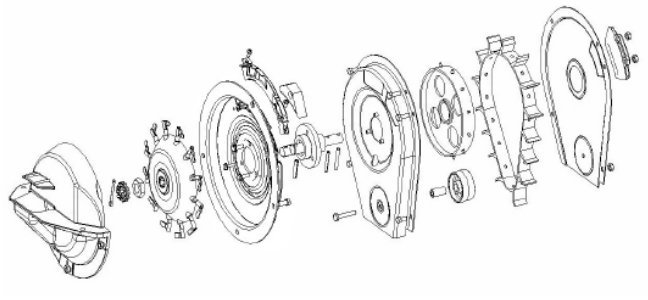

Brush

The Adjustable Brush provides additional flexibility to accommodate a wide range of seed sizes. Use the "T" handle that is attached to gently rotate the brush into position. Follow these general guidelines to adjust the brush position to your seed size and shape. Adjusting the brush to match seed size is simple – adjust the brush counterclockwise for larger seed and clockwise for smaller seed. The numbers listed below correspond to the numbers printed on the outer housing of your meter.

Use the enclosed sticker as a simple reference guide for setting your brush to each seed type. Mount this sticker to the hopper panel or to the back cover of the meter so it is visible as you make your brush adjustments.	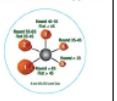

Recommended Brush Settings – start here and adjust for peak performance (Note: All are pounds per unit)					
Round > 65 or Flat > 45	1	Round 45-55 or Flat <35	3	Round <35	5
Round 55-65 or Flat 35-45	2	Round 35-45	4		

Population Max™ Inserts

The Population Max™ backing plate is equipped with an "A" insert. There are two other inserts that can be used. Before changing to a different insert, please consult with a MeterMax® representative for a recommendation.

General Planting Tips

1. Optimum planting speed is 4 ½ to 5 miles per hour. Excess speed results in poor spacing performance and improper depth control.
2. Fine-tune your planter by checking all key components including: Keeton® Seed Firmers, seed tubes, chains, sprockets, tire pressure, seed monitor, double disk openers, gauge wheels, closing wheels, parallel arms, and the row unit itself.

Annual Maintenance

Check your Precision™ Meter annually. Inspect Population Max™, Skip Stop™ and the SureFire™ seed belt. Replace the brush every year. Only use a Precision Planting Adjustable Brush or maroon colored brush in Precision™ Meters – other brushes are too stiff and will increase skips. The insert will eventually show some wear and can easily be replaced. The perimeter wear strip is also replaceable. Please consult with a MeterMax® representative regarding replacement.

Warnings

1. The use of seed-box treatments will affect meter performance and wear of meter components. Precision Planting will not be responsible for performance and rapid wear when seed box treatments are used.
2. Generally, meter performance is enhanced with graphite if using Captan, Cruiser, Poncho or other seed treatments. If graphite is needed, use Precision Planting Graphite or EZ-Slide which is less abrasive then the planter manufacturer's powder graphite.
3. Always store your meters in a dry, secure place to avoid moisture, temperature extremes and mice. Also, be sure to store the meters with the brush between two fingers, so the fingers are not pressing on the brush.
4. Don't ignore your planter monitor. Check your seed use. Investigate discrepancies that could indicate problems with your row unit or meter.

Warranty

Precision Planting, Inc. warrants this product to be free from defects in material or workmanship during the first year of service. The use of seedbox treatments voids this warranty. Our obligation under this warranty shall be limited to repairing or replacing, free of charge to the original purchaser, any part that in our judgment shall show evidence of such defect, provided further that such part shall be returned within thirty (30) days from the date of failure – routed through the dealer from whom the purchase was made. Shipping charges prepaid.

Precision Planting shall have no obligation or liability of any kind on account of any of its equipment and shall not be liable for special or consequential damages. This warranty does not extend to loss of crops, loss because of planting delays or any expense or loss incurred for labor, supplies, substitute machinery, rental or for any other reason. Precision Planting makes no other warranty, express or implied.

23207 Townline Road • Tremont, IL 61568 • (309) 925-5050 • www.precisionplanting.com

955006

Precision PLANTING

Quick Setup Guide for CrustBuster 4030 All Plant with 12 Row Corn Planter Option

DICKEY-john CORPORATION

Seed Manager® SE measures population count and material flow for a maximum of 96 seed rows, 2 fan (RPM) inputs, 3 shaft speed inputs, and a ground speed input. The monitor stores all implement configuration data in non-volatile memory retaining information when disconnected from the battery.

Seed Manager® SE Programming:

1. O/I Powers unit ON and OFF.
2. Press and hold Setup for approximately 1 second to enter Setup mode.
3. Press SELECT to change the position of the flashing digit. This is the active digit for editing.
4. Press SET to change the value of the active digit. Each time SET is pressed, the active digit increases by 1.
5. Press Setup to step to the next Setup parameter or press ↵ to step to the previous Setup parameter.
6. Press or or to return to Operate mode.

Main Operate Display Features:

- Press to toggle between Population, Spacing and Ground Speed displays.

While displaying either Population or Spacing:

- Press to toggle between Scan and Min-Avg-Max display modes.
- Press to select the current row for display. Successive presses sequence forwards through the active rows.

  or
- Press ↵ to select the current row for display. Successive presses sequence backwards through the active rows.
- Press repeatedly to toggle between Fan Speed (1,2), Shaft Speed (1,2,3), and Pressure (1,2) displays.
- Press repeatedly to toggle between Area (1,2,3), Seed Count, and Distance displays.

Seed Count/Distance Count Operation Features:

- Press to access the Seed Count display. Press START/STOP/RESET to start/stop the seed count.
- Press or ↵ to view seed counts on a specific row.
- Press to access the Distance Count display. Press START/STOP/RESET to start/stop the seed count.

Resetting Counter/Accumulator Features:

- Access the desired display to reset. Press and hold START/STOP/RESET to set the value to 0.
  NOTE: AREA 3 is not resettable.

Alarm Acknowledgement/Audible Adjustment Features:

- Press to acknowledge a pending alarm and silence the audible beep.
  NOTE: If any buttons fail to respond, press to acknowledge any possible missed alarms.
- Press and hold to set the desired audible alarm level.

Refer to User's Manual for detailed operating instructions.

Setup Parameter	Default Value or Value to Enter	Instructions/Definitions
Seed Flow Alarm Adjustment	00	Set value to establish how many seeds per time interval must flow past the sensor before the alarm activates identifying a row failure. The default value of 00 requires a minimum seed flow of at least 2 seeds per second before row failure alarm activates. Only change if current seed rates are low enough to generate nuisance row failure alarm.
Population Hi Limit	See Notes	Set to a value that represents the maximum desired seed rate.
Population Low Limit	See Notes	Set to a value that represents the minimum desired seed rate.
Row Width	30.0	Distance between row units in inches.
Implement Width	180.0	Seeding width of implement, in inches. This value recalculates whenever Row Width or the total number of sensors configured is changed. Before exiting Setup, verify this value is correct.
Ground Speed Source	See Notes	Value is either D1 for radar or R1 for magnetic. Press Set until correct value displays.
Distance Calibration	See Notes	Perform a ground speed calibration as described in t he User's Manual for the most accurate ground speed readings.
Auto Configuration	See Notes	If system components have already been installed, perform the Auto Calibration to have the system automatically detect the number of modules and sensors installed. See User's manual for details.
Split Row Configuration (Pattern Selection)	00	If required, change this setting ONLY AFTER all modules and sensors have been configured. See User's Manual for the description list of values for this parameter.
Number of Seed Modules	1	Refer to System Installation Layout for proper location of modules on the machines.
Number of Sensors/ Module B1	12	Refer to System Installation Layout for correct sensor to module connections.
Row Status	N/A	Refer to User's Manual for specific instruction
Total Number of Rows	12	This value cannot be changed. It is present for display only.
Number of Fan Sensors	0	Number of Fan Speed sensor connected to a Shaft Speed Module on the system.
Number of Shaft Sensors	0	Number of Shaft speed sensors connected to a shaft speed module on the system.
Number of Hopper Sensors	2	Number of Hopper Level sensors connected to all modules on the system.
Number of Pressure Sensors	0	Number of Pressure Sensors connected to a Shaft Speed Module on the system.
Blockage Mode Configuration	0	
Population Filter	00	If undesirable fluctuations in population readings are present, enter a value of 50. Increase this value if fluctuations are still present; lower this value if readouts do not update quick enough. Refer to User's Manual.
Population Scalar	100	Increase/decrease this value to change the population display.
Self-Test	None	See User's Manual for detailed instructions.
English/Metric	None	Default setting is English. Refer to User's Manual for Metric setting.

DICKEY-john CORPORATION

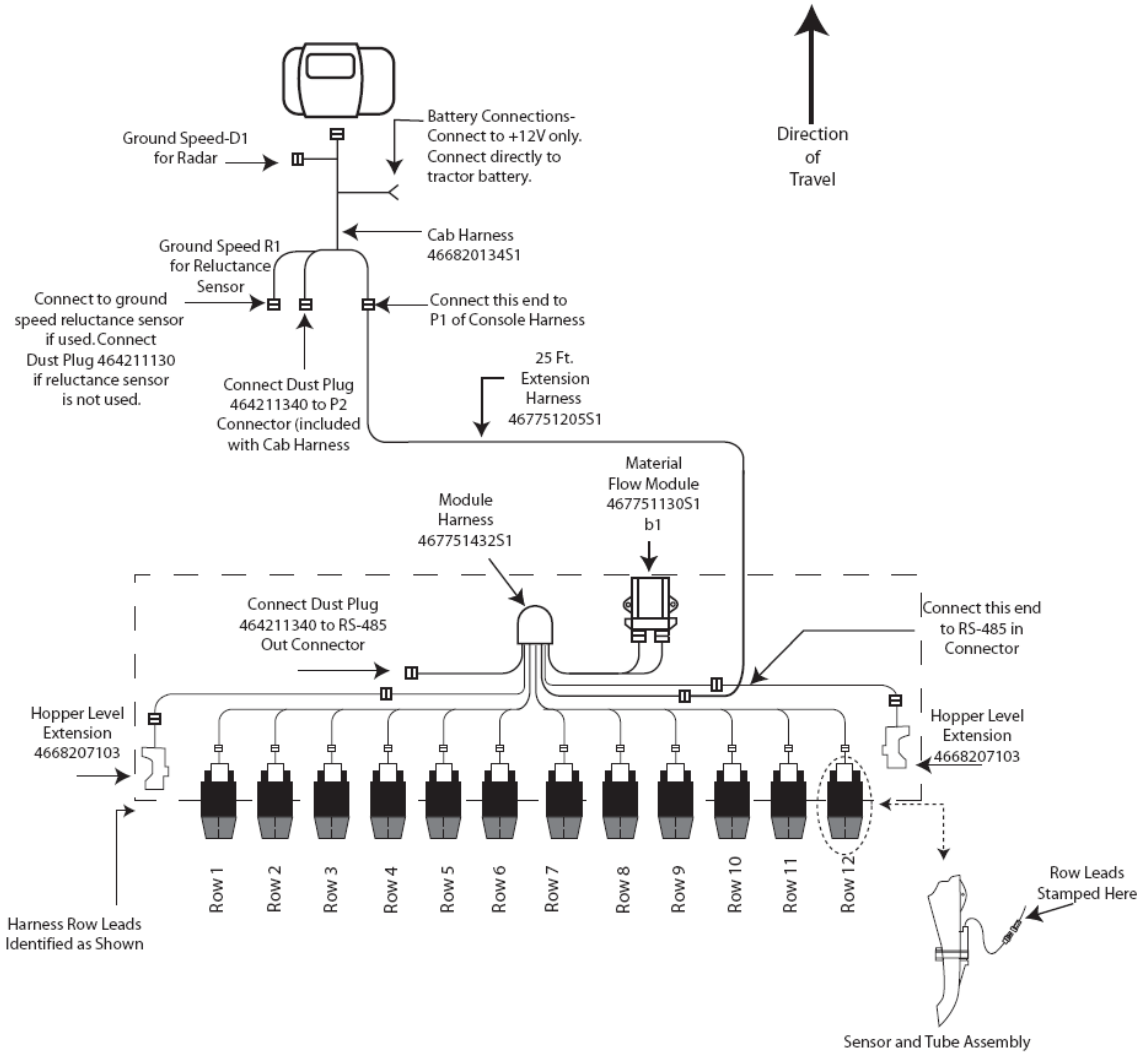

System Component Installation

1. Locate and install system components per diagram. Note how modules are identified and be sure to connect seed sensors to the correct harness leads.
2. Connect module harnesses together with included extensions. Modules connect to the monitor using the P1 cab harness connection. Plug all unused connectors with included dust plugs.
3. Secure any excess wires with tie wraps.
4. See User's Manual for additional installation instruction.
5. Power on monitor and program with the correct constants described on this Quickstart Guide.

   NOTE: The pre-programmed constants in the monitor will cause an error code on the initial power on of a new system. This is normal and can be cleared by pressing .

Copyright 2007 DICKEY-john Corporation
Specifications subject to change without notice.

Singulator Removal and Conversion Instructions:

The following instructions can be used to convert from a planter type drill unit to a wobble slot metering drill unit.

Step 1: Lower press wheel arms by removing ½" bolt from rear press wheel arm joint.



Step 2: Remove two ½" bolts from singulator plate frame.

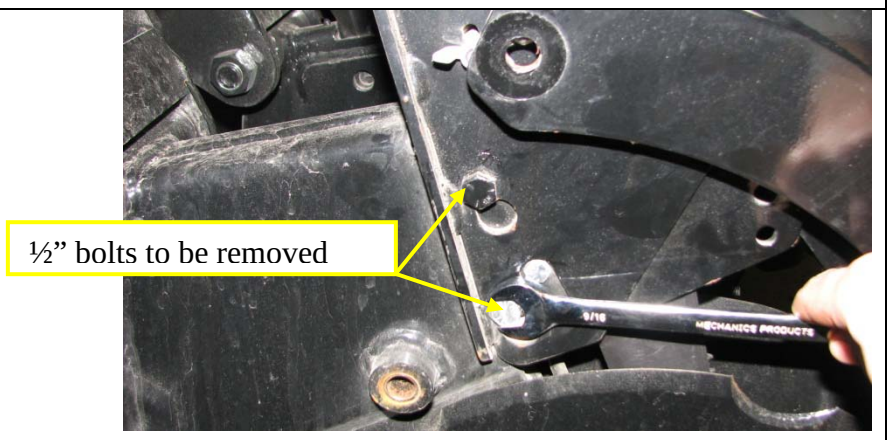

Step 3: Slide singulator unit out from planter opener and remove drive chain from sprocket.
Note: *Drive chain can remain attached to sprocket on rotating tool bar.*

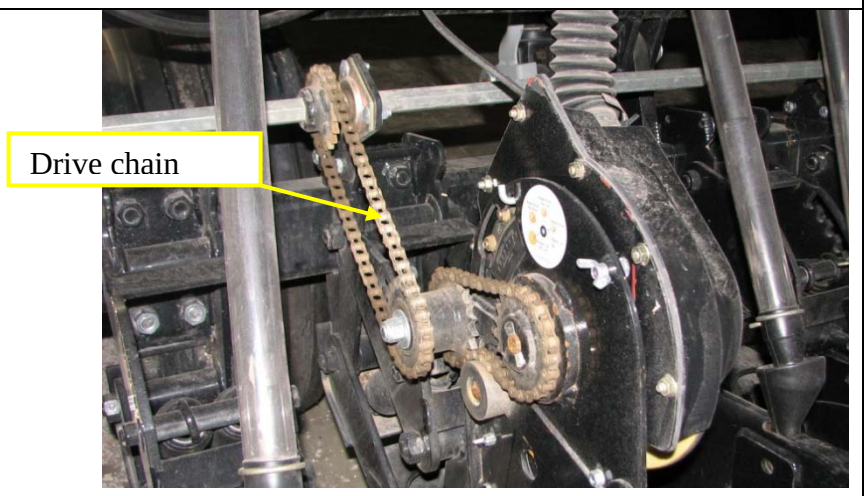

Step 4: Remove seed tube by cutting tie strap and unscrewing tightening band.	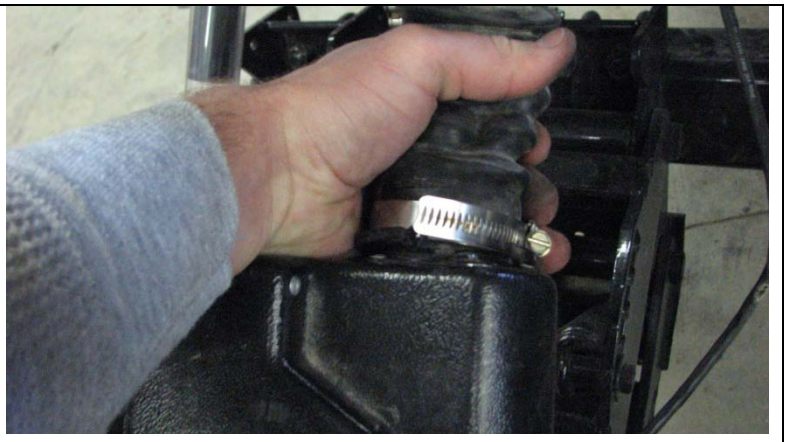
Step 5: Mount press wheel arms back to original position by re-bolting rear press wheel arm joint with ½" bolt.	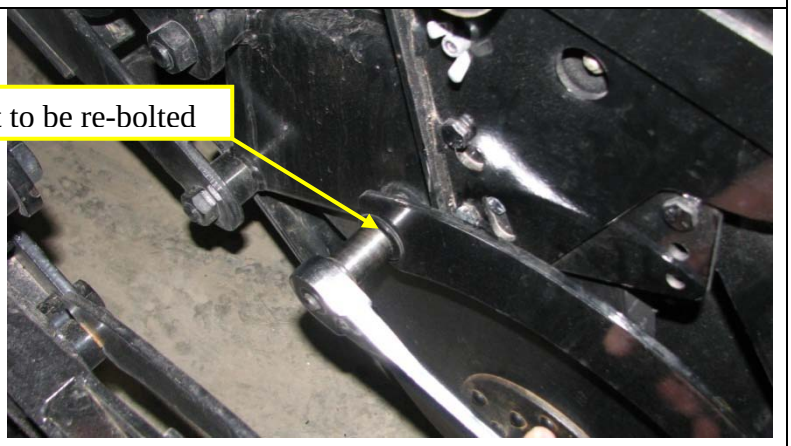
Step 6: Mount telescoping tube assembly in place of singulator unit.	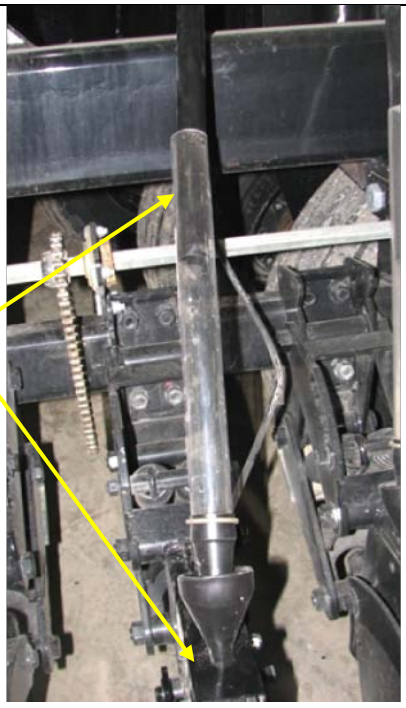
Step 7: Store singulator unit inside in a dry location.	

4000 Sprocket Locations

SPROCKET OF CLUTCH:

6” SPACING – 25 TOOTH
7 ½” & 15” SPACING – 20 TOOTH
8” SPACING – 18 TOOTH
10” SPACING – 20 TOOTH

PART NUMBERS:

25 TOOTH - #863803
20 TOOTH - #863795
18 TOOTH - #863787

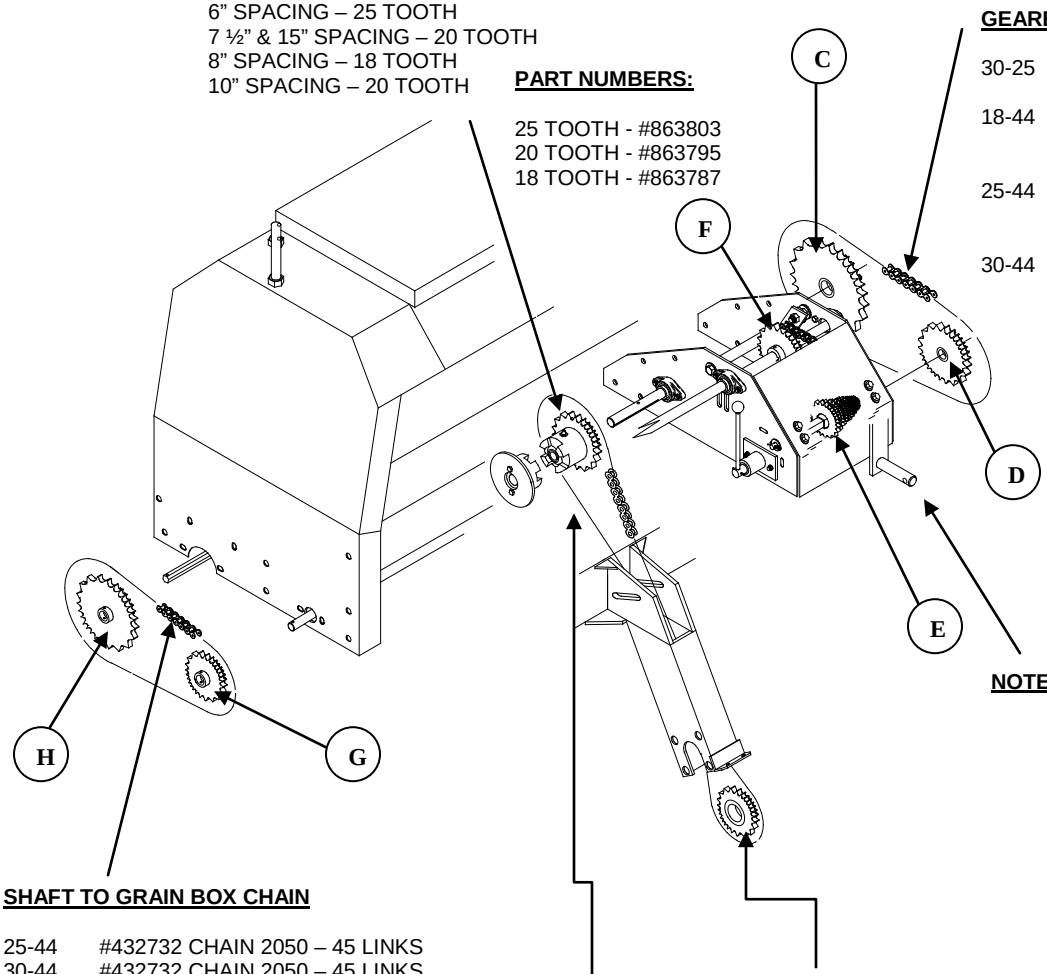

GEARBOX CHAIN:

30-25	27 LINKS 2050 CHAIN W/ (1) 2050 OFFSET & (1) 2050 CONN.
18-44	27 LINKS 2050 CHAIN W/ (1) 2050 3 LINK CHAIN & (2) 2050 CONN.
25-44	27 LINKS 2050 CHAIN W/ (1) 2050 3 LINK CHAIN, (1) 2050 OFFSET, & (2) 2050 CONN.
30-44	27 LINKS 2050 CHAIN W/ (1) 2050 3 LINK CHAIN, (2) 2050 OFFSET, & (2) 2050 CONN.

PART NUMBERS:

2050 CHAIN – 27 LINKS #431239

NOTE: 2050 LINKS, 2050 OFFSET LINKS, 2050 CONN., & 2050 CHAIN-3 LINKS ARE ALL FOUND IN CHAIN PARTS BAG #860841

NOTE: EXTRA SPROCKETS (DEPENDING ON SET-UP) RIDE ON SPROCKET CARRIER.

SHAFT TO GRAIN BOX CHAIN

25-44	#432732 CHAIN 2050 – 45 LINKS
30-44	#432732 CHAIN 2050 – 45 LINKS
25-30	#432732 CHAIN 2050 – 45 LINKS
44-18	#432732 CHAIN 2050 – 45 LINKS W (1) #430983 2050 CONN.

NOTE: USE IDLER PIVOT #965640 TO ADJUST CHAIN FOR DIFFERENT SPROCKETS

SPOCKET ON WHEEL

6” SPACING – 18 TOOTH
7 ½” & 15” SPACING – 18 TOOTH
8” SPACING – 18 TOOTH
10” SPACING – 25 TOOTH

PART NUMBERS
18 TOOTH - #954370
25 TOOTH - #953216

C, D, G, & H

2050 SPROCKETS W/1” HUB

18T	#954131
25T	#935098
30T	#935106
44T	#954362

2050 CHAIN-CLUTCH TO WHEEL

6” SPACING	55 – 2050 LINKS W/2050 CONN.
7 ½” SPACING	55 – 2050 LINKS W/2050 OFFSET & 2050 CONN.
8” SPACING	55 – 2050 LINKS W/2050 CONN.
10” SPACING	55 – 2050 LINKS W/2050 OFFSET & 2050 CONN.

2050 CHAIN PART NUMBERS

2050 CHAIN – 55 LINKS #432666

NOTE: 2050 LINKS, 2050 OFFSET LINKS, 2050 CONN., & 2050 CHAIN-3 LINKS ARE ALL FOUND IN CHAIN PARTS BAG #860841

7 ½” SPACING DRILL

Planter Units on 30” Row Spacing

LOW RATE:

Sprocket Box		Derailleur		Box End		
C	**D**	**E**	**F**	**G**	**H**	**POPULATION**
44	25	16	30	26	30	18785
44	25	17	30	26	30	19960
44	25	18	30	26	30	21135
44	25	19	30	26	30	22310
44	25	20	30	26	30	23485
44	25	21	30	26	30	24655
44	25	22	30	26	30	25830
44	25	23	30	26	30	27005

(Factor = 1174.1 x E)
(12 Finger tine pickup)

HIGH RATE:

Sprocket Box		Derailleur		Box End		
C	**D**	**E**	**F**	**G**	**H**	**POPULATION**
44	25	16	30	30	26	25010
44	25	17	30	30	26	26575
44	25	18	30	30	26	28140
44	25	19	30	30	26	29700
44	25	20	30	30	26	31265
44	25	21	30	30	26	32830
44	25	22	30	30	26	34390
44	25	23	30	30	26	35955

(Factor = 1563.2 x E)
(12 Finger tine pickup)

10” SPACING DRILL

Planter Units on 30” Row Spacing

LOW RATE:

Sprocket Box		Derailleur		Box End		
C	D	E	F	G	H	POPULATION
25	30	16	30	26	30	12355
25	30	17	30	26	30	13130
25	30	18	30	26	30	13900
25	30	19	30	26	30	14670
25	30	20	30	26	30	15445
25	30	21	30	26	30	16215
25	30	22	30	26	30	16990
25	30	23	30	26	30	17760

(Factor = 772.2 x E)
(12 Finger tine pickup)

HIGH RATE:

Sprocket Box		Derailleur		Box End		
C	D	E	F	G	H	POPULATION
25	30	16	30	30	26	16450
25	30	17	30	30	26	17475
25	30	18	30	30	26	18505
25	30	19	30	30	26	19530
25	30	20	30	30	26	20560
25	30	21	30	30	26	21590
25	30	22	30	30	26	22615
25	30	23	30	30	26	23645

(Factor = 1028 x E)
(12 Finger tine pickup)

10” SPACING DRILL

Planter Units on 30” Row Spacing

LOW RATE:

Sprocket Box		Derailleur		Box End		
C	**D**	**E**	**F**	**G**	**H**	**POPULATION**
30	25	16	30	26	30	17790
30	25	17	30	26	30	18900
30	25	18	30	26	30	20015
30	25	19	30	26	30	21125
30	25	20	30	26	30	22240
30	25	21	30	26	30	23350
30	25	22	30	26	30	24460
30	25	23	30	26	30	25575

(Factor = 1111.9 x E)
(12 Finger tine pickup)

HIGH RATE:

Sprocket Box		Derailleur		Box End		
C	**D**	**E**	**F**	**G**	**H**	**POPULATION**
30	25	16	30	30	26	23685
30	25	17	30	30	26	25165
30	25	18	30	30	26	26645
30	25	19	30	30	26	28125
30	25	20	30	30	26	29605
30	25	21	30	30	26	31085
30	25	22	30	30	26	32565
30	25	23	30	30	26	34050

(Factor = 1480.3 x E)
(12 Finger tine pickup)

4030 Planter Drill

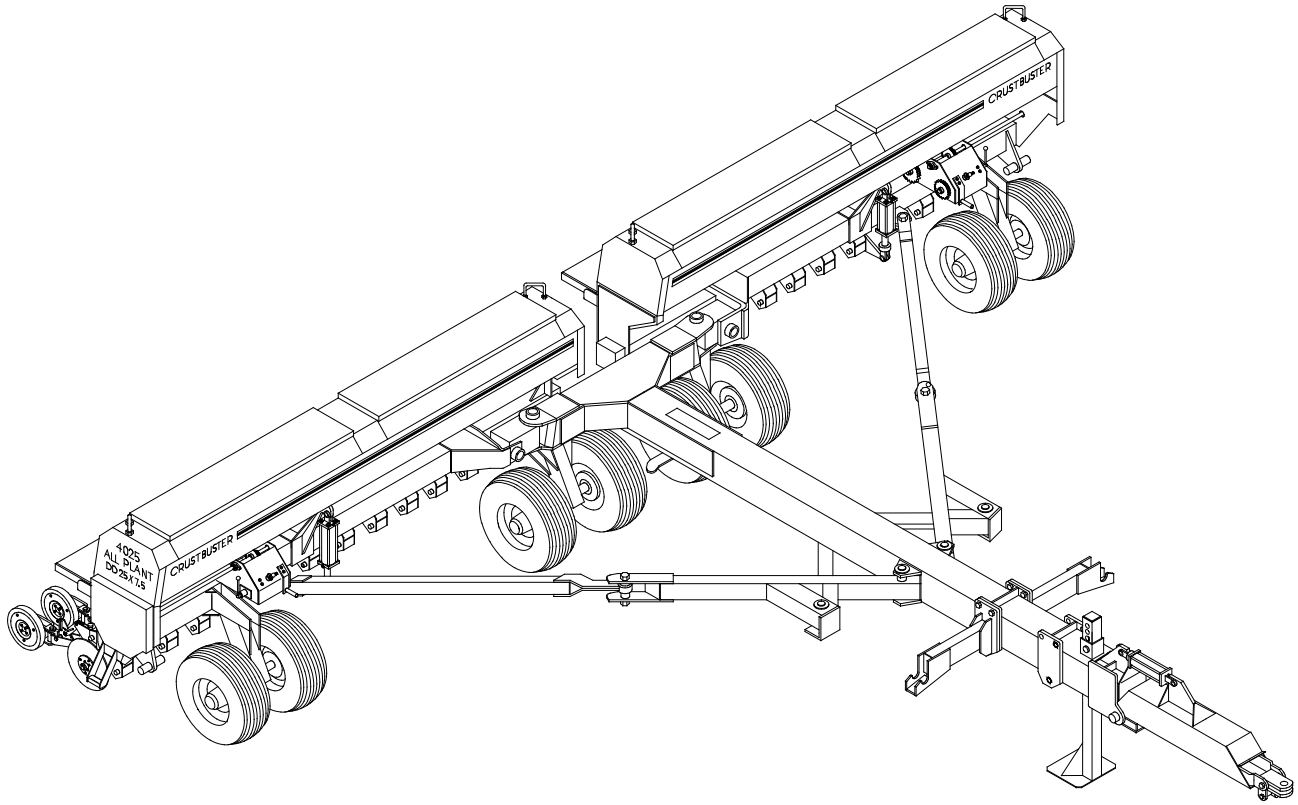

Repair Parts

4030 Right Wing Section – Planter Drill

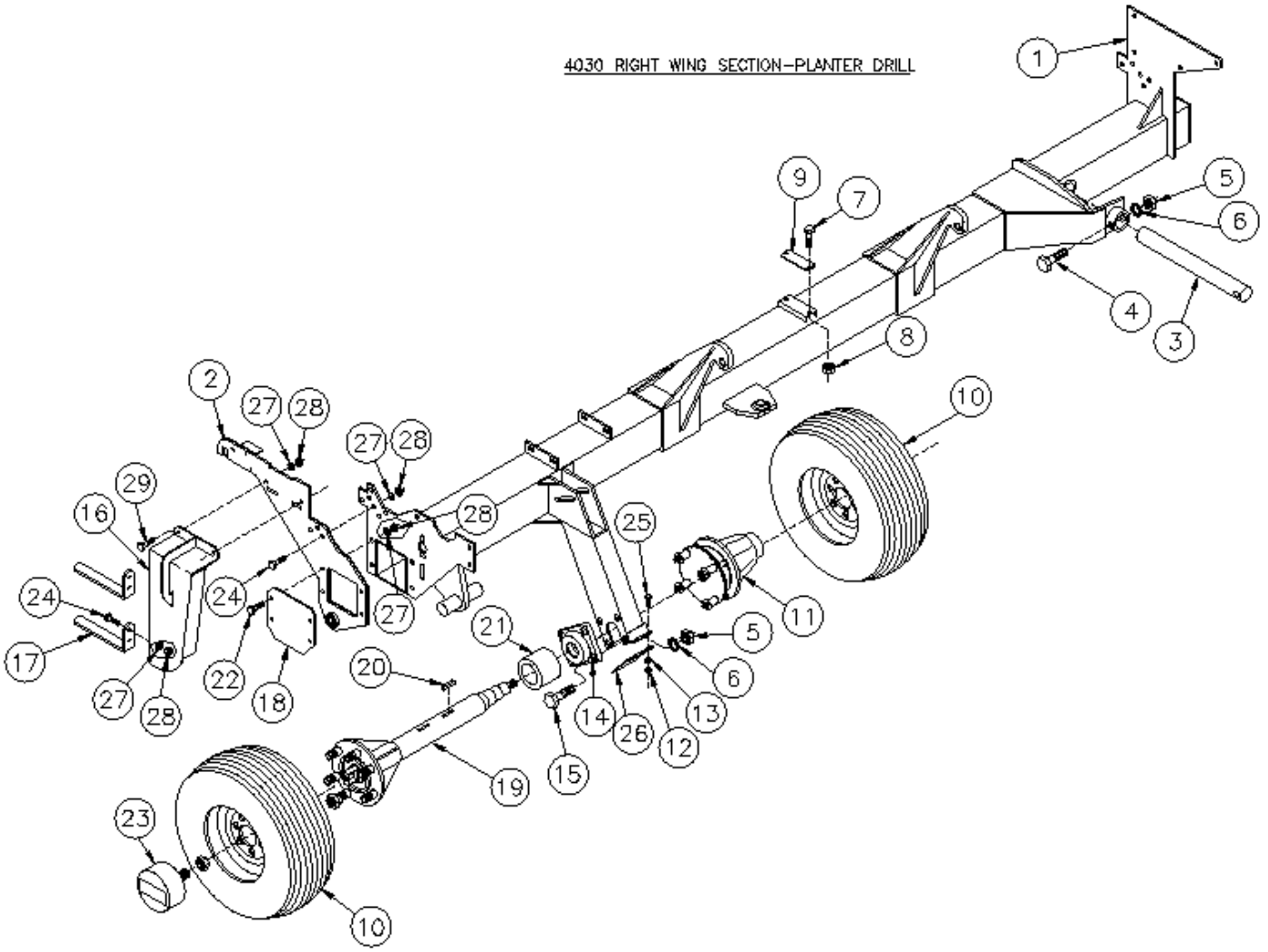

Label	Part #	Description	Label	Part #	Description
1	961797	4030 30” RIGHT WING FRAME	16	967174	STEP MOUNT RIGHT
2	967125	BOX END WALKBOARD BRACKET – RIGHT	17	221515	DRILL STEP
3	311316	HINGE PIN	18	958173	FRAME END CAP – PAINTED
4	335182	HHCS 5/8” X 4 ½” (GR. 5)	19	958264	WING WHEEL SPINDLE
5	330571	NUT 5/8” HEX	20	310656	KEY 3/16” X 1 ½”
6	330878	WASHER 5/8” LOCK	21	151787	SPINDLE BUSHING
7	335877	HHCS 3/8” X 1 ¾” (GR. 5)	22	331926	HHCS ½ X 2 (GR. 5)
8	330837	NUT 3/8” HEX NYLOCK	23	603787	ACRE COUNTER – 200 TO 1 (30’ AP & MT)
9	217729	HOSE CARRIER BOLT PLATE	24	01147800	HHCS ½” X 1 ½” (GR. 5)
10	815175	MOUNTED TIRE 11L 8 PLY 6B	25	01057900	HHCS ¼ X ¾ (GR. 5)
11	870196	CLUTCH ASSY. W/ HUB I/BOLTS	26	221374	WHEEL ARM CHAIN GUARD
12	332205	NUT ¼” HEX	27	330142	WASHER ½” LOCK
13	330050	WASHER ¼ LOCK	28	330134	NUT ½” HEX
14	403279	BEARING 2” 4B FLANGE	29	01180900	HHCS ½” X 1 ¼” (GR. 5)
*	403287	BEARING INSERT			
15	01071000	HHCS 5/8” X 2” (GR. 5)			

Planter Meter Mount Assembly – Long

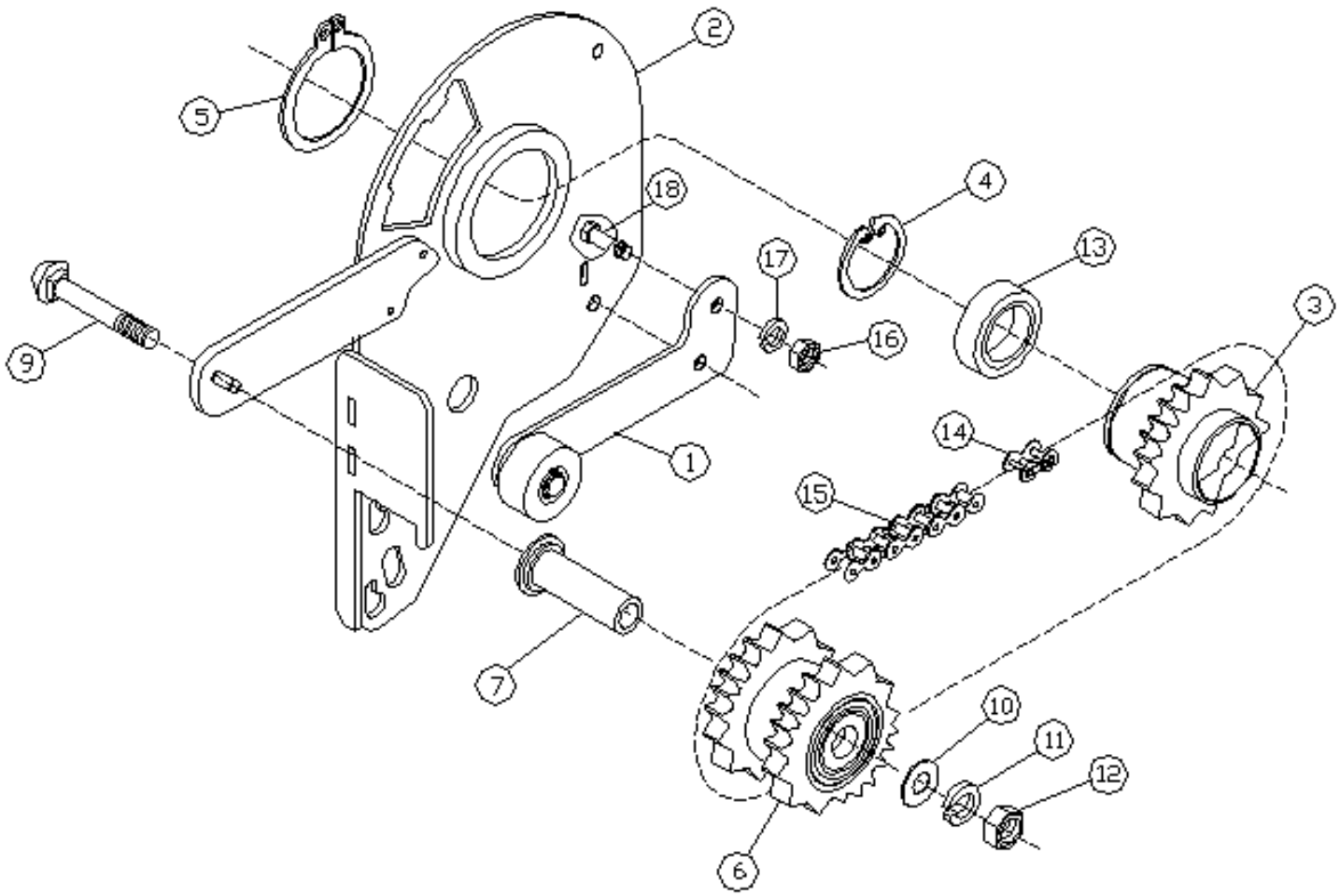

1	874222	1	IDLER ASSEMBLY
2	966416	1	SEED MOUNT – LONG
3	966390	1	DRIVE SPROCKET
4	607234	1	INTERNAL SNAP RING
5	607242	1	EXTERNAL SNAP RING
6	875633	1	#40 DOUBLE SPROCKET W/BEARINGS
7	153122	1	SPROCKET SPOOL
8			
9	333310	1	CARRIAGE BOLT – ½” X 3 ½”
10	330159	1	WASHER – ½” FLAT
11	330142	1	WASHER – ½” LOCK
12	330134	1	NUT – ½” HEX
13	403386	1	BEARING – CENTER
14	434084	1	#40 CONNECTOR LINK
15	434332	1	#40 CHAIN X 55 LINKS
16	330035	2	NUT – 3/8” HEX
17	330043	2	WASHER – 3/8” HEX
18	01017300	2	HHCS – 3/8” X 1”

Planter Meter Mount Assembly – Short

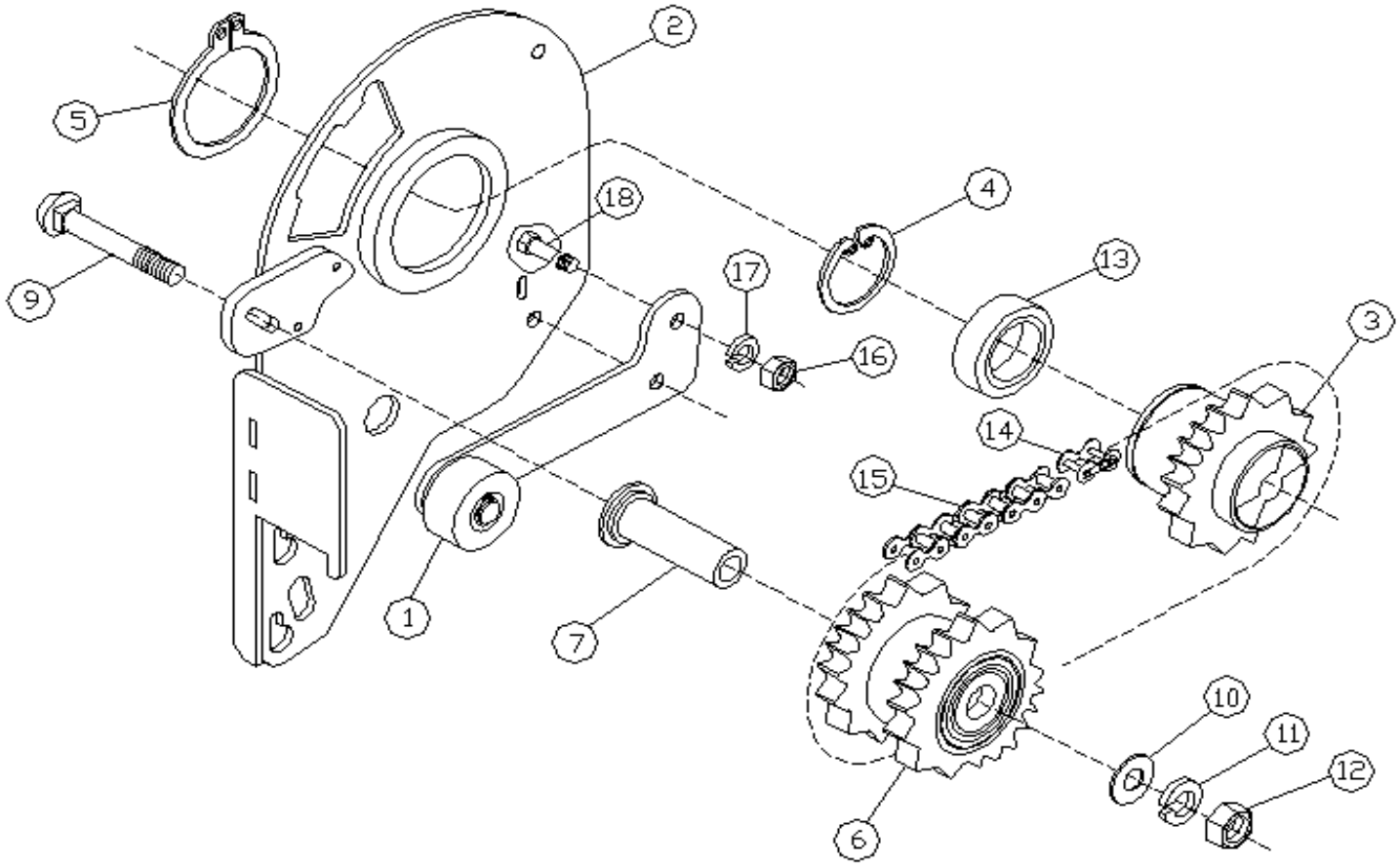

Label	Part #	Qty.	Description
1	874222	1	IDLER ASSEMBLY
2	966408	1	SEED MOUNT – SHORT
3	966390	1	DRIVE SPROCKET
4	607234	1	INTERNAL SNAP RING
5	607242	1	EXTERNAL SNAP RING
6	875633	1	#40 DOUBLE SPROCKET W/BEARINGS
7	153122	1	SPROCKET SPOOL
8			
9	333310	1	CARRIAGE BOLT – ½” X 3 ½”
10	330159	1	WASHER – ½” FLAT
11	330142	1	WASHER – ½” LOCK
12	330134	1	NUT – ½” HEX
13	403386	1	BEARING – CENTER
14	434084	1	#40 CONNECTOR LINK
15	434324	1	#40 CHAIN X 39 LINKS
16	330035	2	NUT – 3/8” HEX
17	330043	2	WASHER – 3/8” LOCK
18	01017300	2	HHCS – 3/8” X 1”

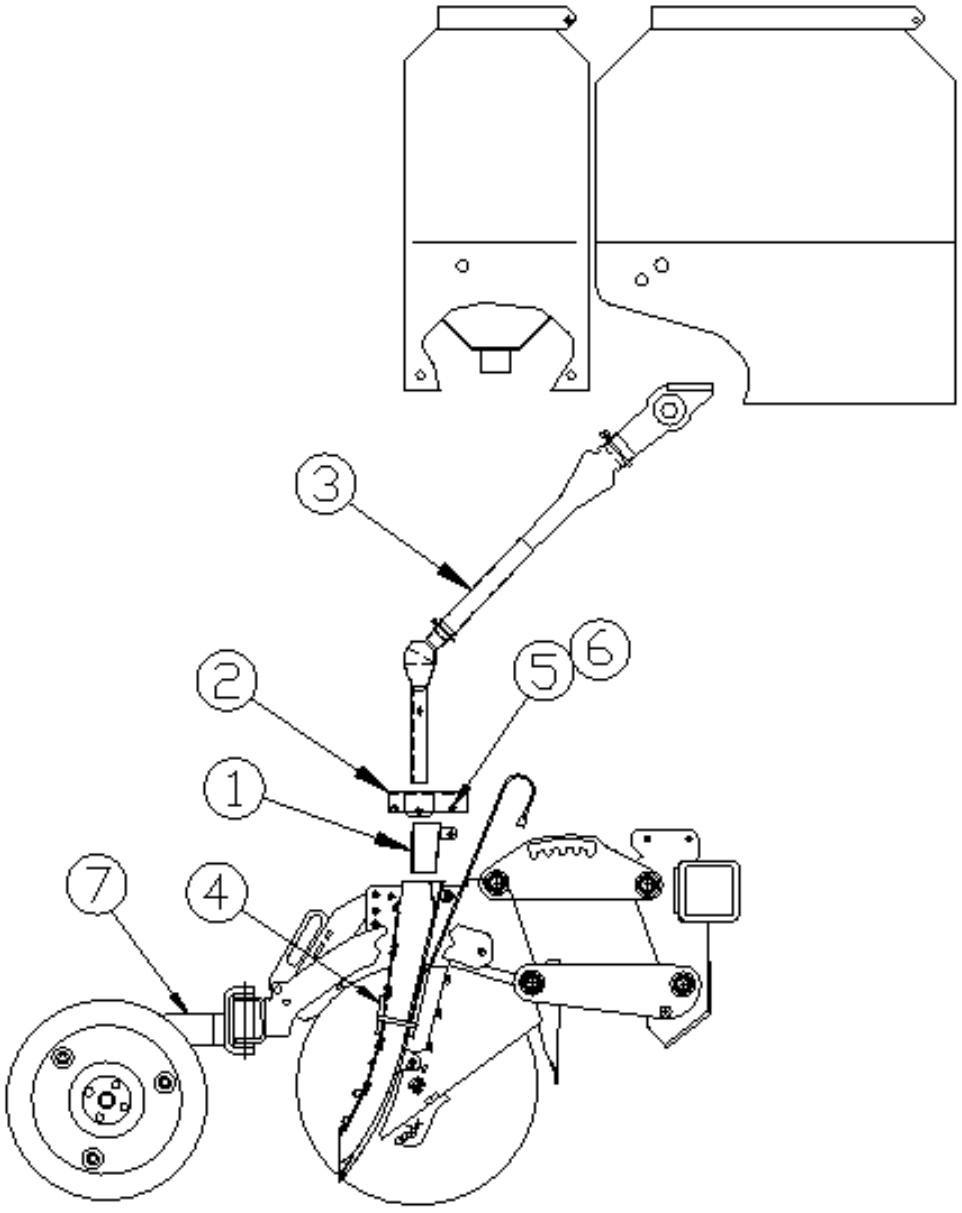

Label	Part #	Description
1	967737	SEED TUBE EXTENSION WELDMENT
2	967885	SEED TUBE ADAPTER WELDMENT
3	874206	SEED TUBE ASSEMBLY
4	874172	SEED TUBE & SENSOR ASSEMBLY
5	331884	HHCS 3/8” X 2 ½”
6	330837	HEX NYLOCK – 3/8”
7	859967	3 X 14 PRESSWHEEL & ARM ASSEMBLY

Planter Drill Feed Tube

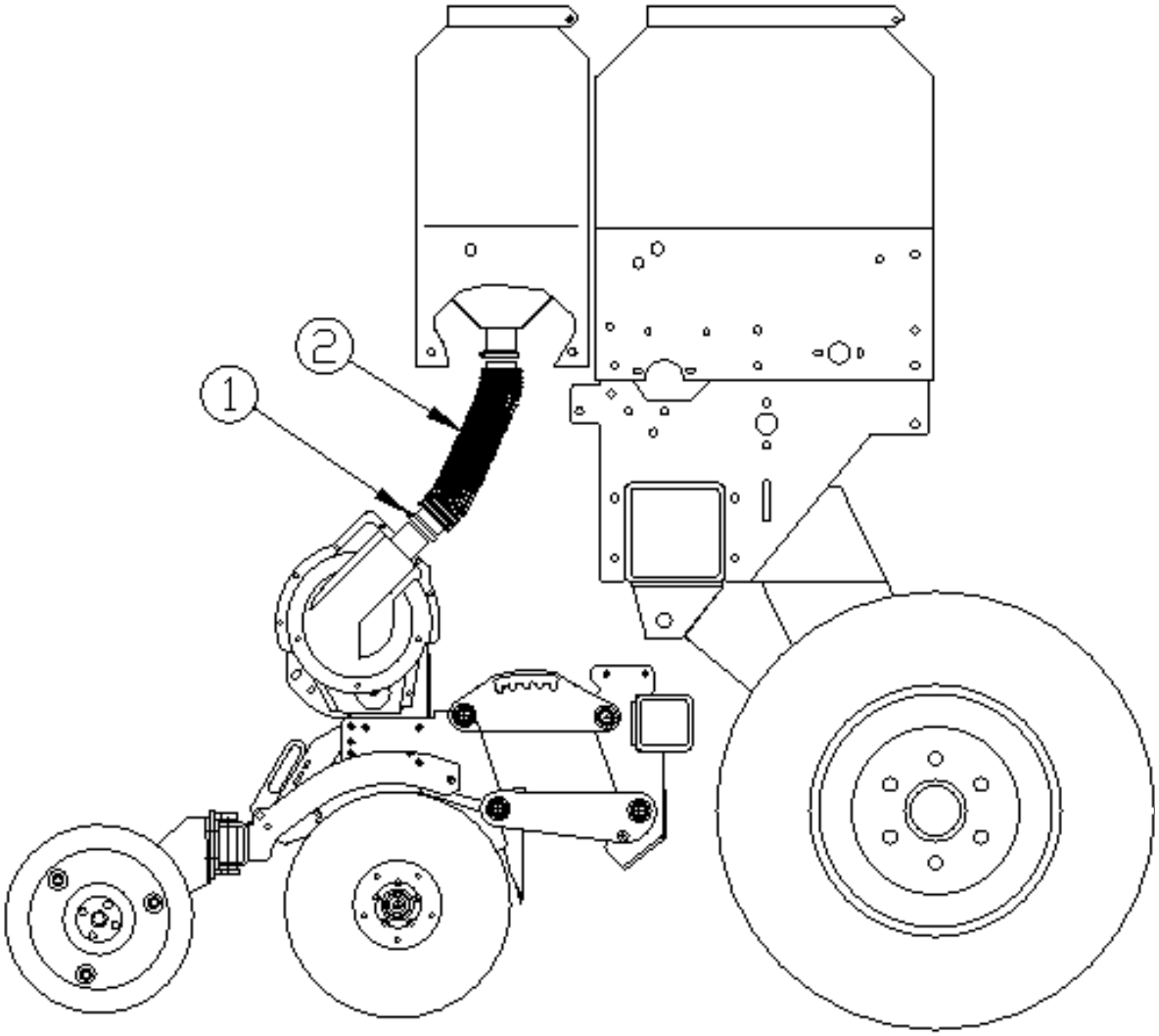

Label	Part #	Description
1	571406	PLANTER FEED TUBE
2	606392	HOSE CLAMP 2 ½” WORM DRIVE

Planter Drill Feed Tube – Short

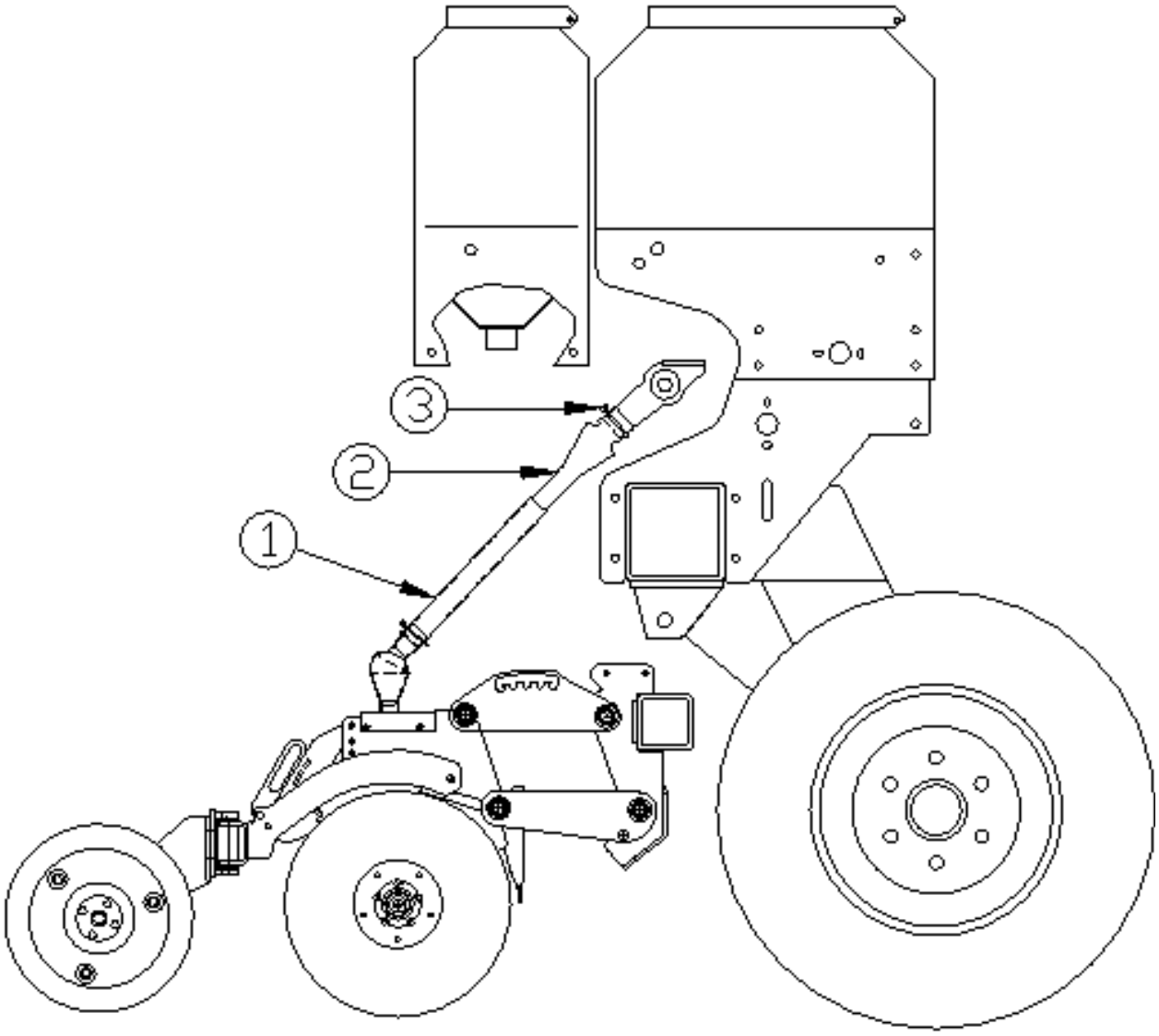

Label	Part #	Description
1	874206	SEED TUBE ASSEMBLY – PLANTER TO DRILL
2	571208	UPPER SEED TUBE – 19”
3	604777	CLAMP 1.375 X .162 (A-22)

Planter Drill Drive Repair Parts

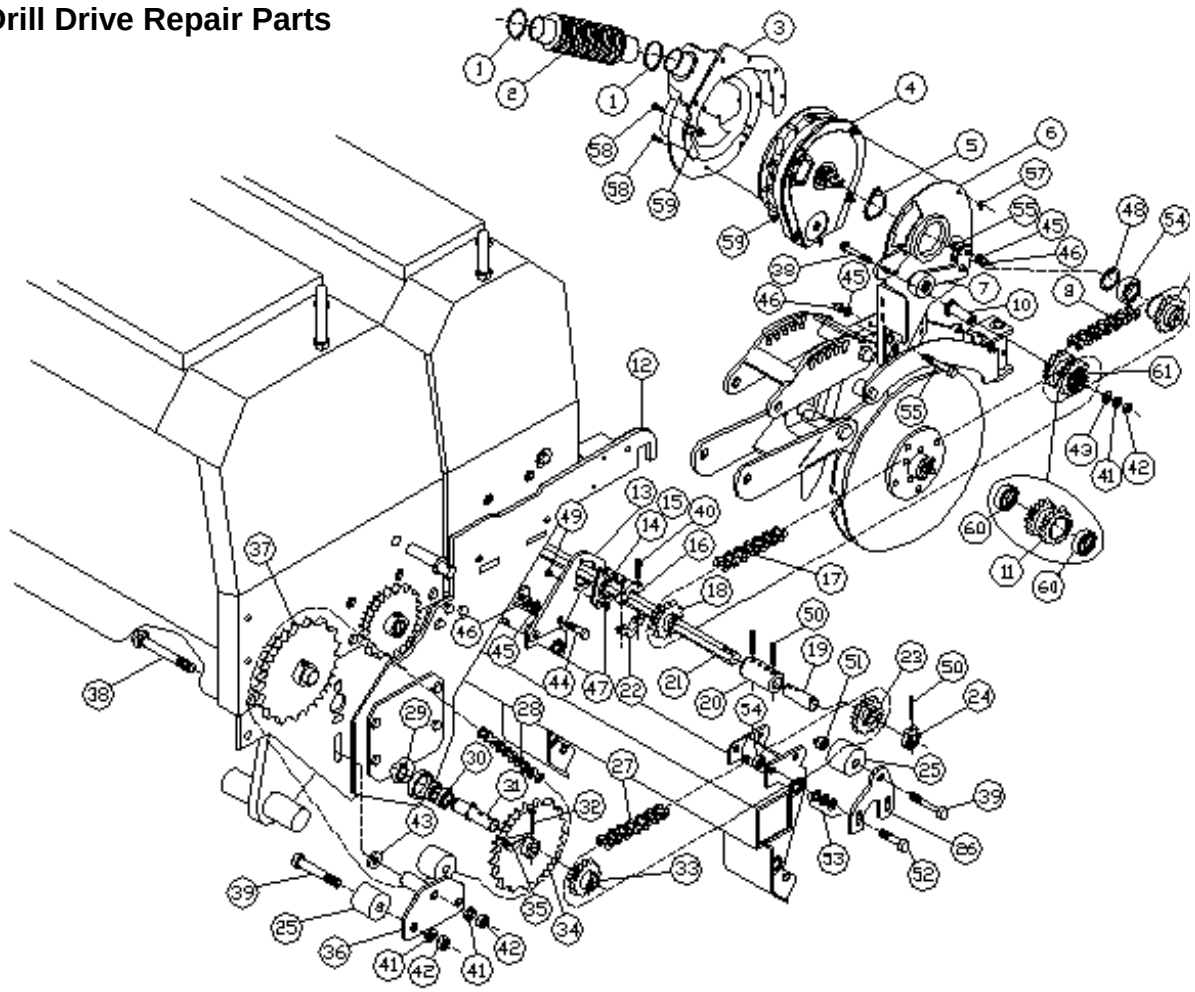

Label	Part #	Description	Label	Part #	Description
1	606392	CLAMP HOSE 2 ½" WORM DRIVE	17	433029	#40 CHAIN X 57 LINKS W/HALF LINK & CONN.
2	571406	PLANTER FEED TUBE	18	966648	#40 19 TOOTH SPROCKET
3	873299	FINGER TINE COVER ASSEMBLY	19	311464	PLANTER DRIVE SHAFT
4	873281	PRECISION PLANTER UNIT ASSEMBLY	20	966689	DRIVE SHAFT SPLICE SPOOL
5	607242	EXTERNAL RETAINING RING-1.857 DIA. - .068 WIDTH	21	311449	PLANTER UNIT DRIVE SHAFT – 7/8" HEX
6	874248	METER MOUNT ASSEMBLY-SHORT (INC. 7,9,10,11)	22	226134	7/8" HEX SHAFT LOCK COLLAR HALF
*	874255	METER MOUNT ASSEMBLY-LONG (INC. 7,9,10,11)	23	966598	SLIP SPROCKET – 15 TOOTH #50 W/1.630 BORE
7	874222	IDLER ASSEMBLY	24	226241	SLIP SPROCKET LUG & HUB
8	434324	#40 CHAIN X 39 LINKS W/434084 CONN. – SHORT	25	571273	NYLON IDLER
*	434332	#40 CHAIN X 55 LINKS W/434084 CONN. – LONG	26	226274	IDLER PLATE
9	966390	PLANTER DRIVE SPROCKET	27	433797	#50 CHAIN X 37 LINKS W/433870 CONN. LINK
10	153122	DOUBLE SPROCKET BUSHING	28	433789	#50 CHAIN X 101 LINKS W/433870 CONN. LINK
11	966713	DOUBLE 20 TOOTH #40 SPROCKET	29	605766	EXTERNAL RETAINING RING – 1"
12	967117	BOX END WALKBOARD BRACKET – LEFT	30	03003100	BEARING 1" I.D. X 5/8" PREC. W/SPRING
*	967125	BOX END WALKBOARD BRACKET – RIGHT	31	311456	PLANTER UNIT CROSSOVER SHAFT
13	226365	BEARING HANGER BRACKET	32	335349	CLEVIS PIN ¼" X 1 5/8"
14	403436	TRIANGULAR FLANGE	33	966705	#50 15 TOOTH SPROCKET W/1" ROUND BORE
15	403444	52MM O.D. RADIAL BALL BEARING W/ 7/8" HEX BORE	34	966499	#50 26 TOOTH SPROCKET
16	226126	7/8" HEX SHAFT LOCK COLLAR HALF	35	337071	COTTER PIN .094 X .500

Label	Part #	Description
36	965640	IDLER PIVOT
37	966481	#50 30 TOOTH SPROCKET
38	333310	CARRIAGE BOLT – ½" X 3 ½"
39	335422	HHCS ½" X 2 ½"
40	338269	SOCKET HEAD CAP SCREW ¼-20 X 1
41	330142	LOCK WASHER – ½"
42	330134	HEX NUT – ½"
43	330159	FLAT WASHER – ½"
44	01017300	HHCS 3/8" X 1"
45	330043	LOCK WASHER – 3/8"
46	330035	HEX NUT – 3/8"
47	01047000	CRG BOLT .313 X 1"
48	607234	INTERNAL SNAP RING
49	331611	HEX NYLOCK NUT - .313
50	330662	ROLL PIN - .313 X 1.750
51	331363	HEX NYLOCK NUT – ½"
52	335703	HHCS 3/8" X 1 ½"
53	330894	FLAT WASHER – 3/8"
54	403386	BEARING – CENTER

Label	Part #	Description
55	330886	HHCS 3/8" X 3"
56	01158500	HHCS 3/8" X 1 ¼"
57	338103	WING NUT – SELF LOCKING – ¼"
58	01150200	HHCS ¼" X ½"
59	330522	HEX NYLOCK NUT – ¼"
60	01024900	BEARING
61	875633	DOUBLE 20T #40 SPROCKET W/BEARINGS

(Drawing reprinted for convenience)

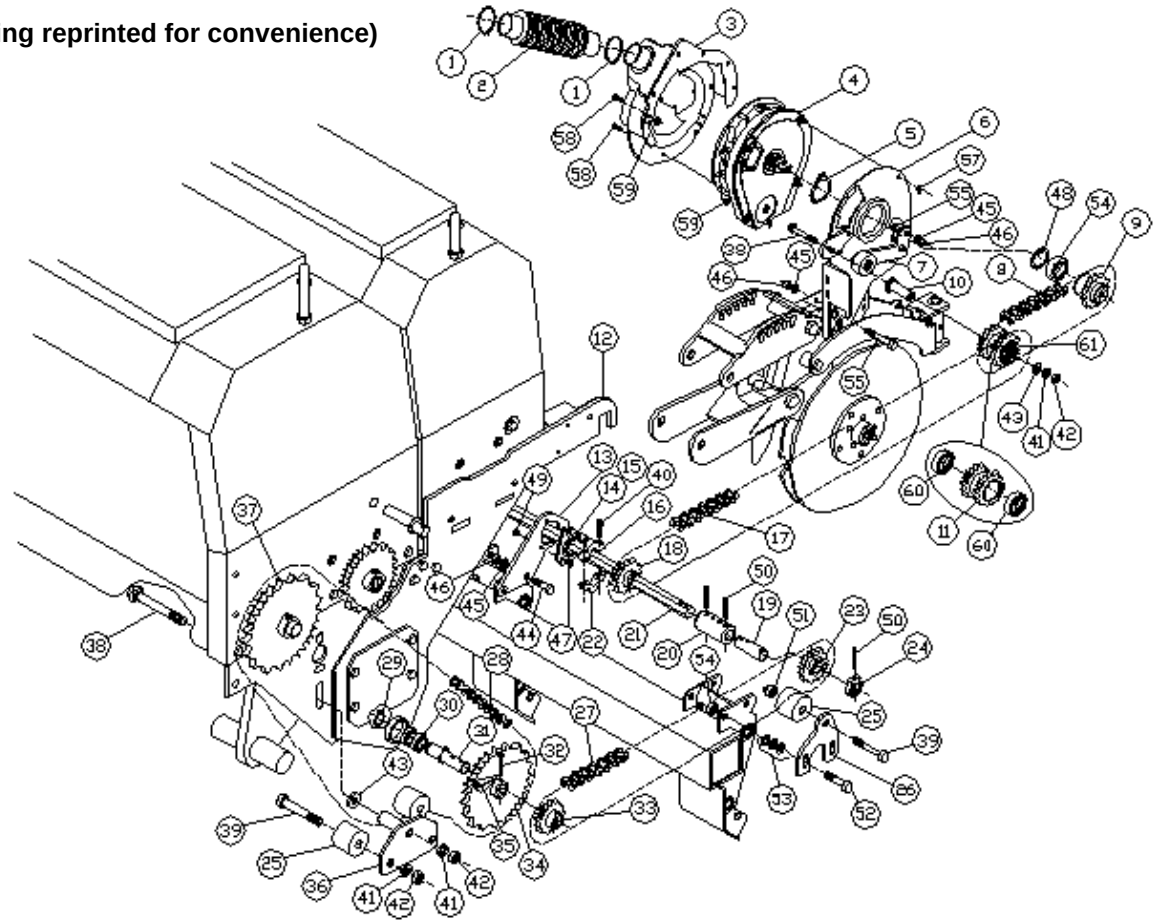

Planter Drill Corn Box Repair Parts

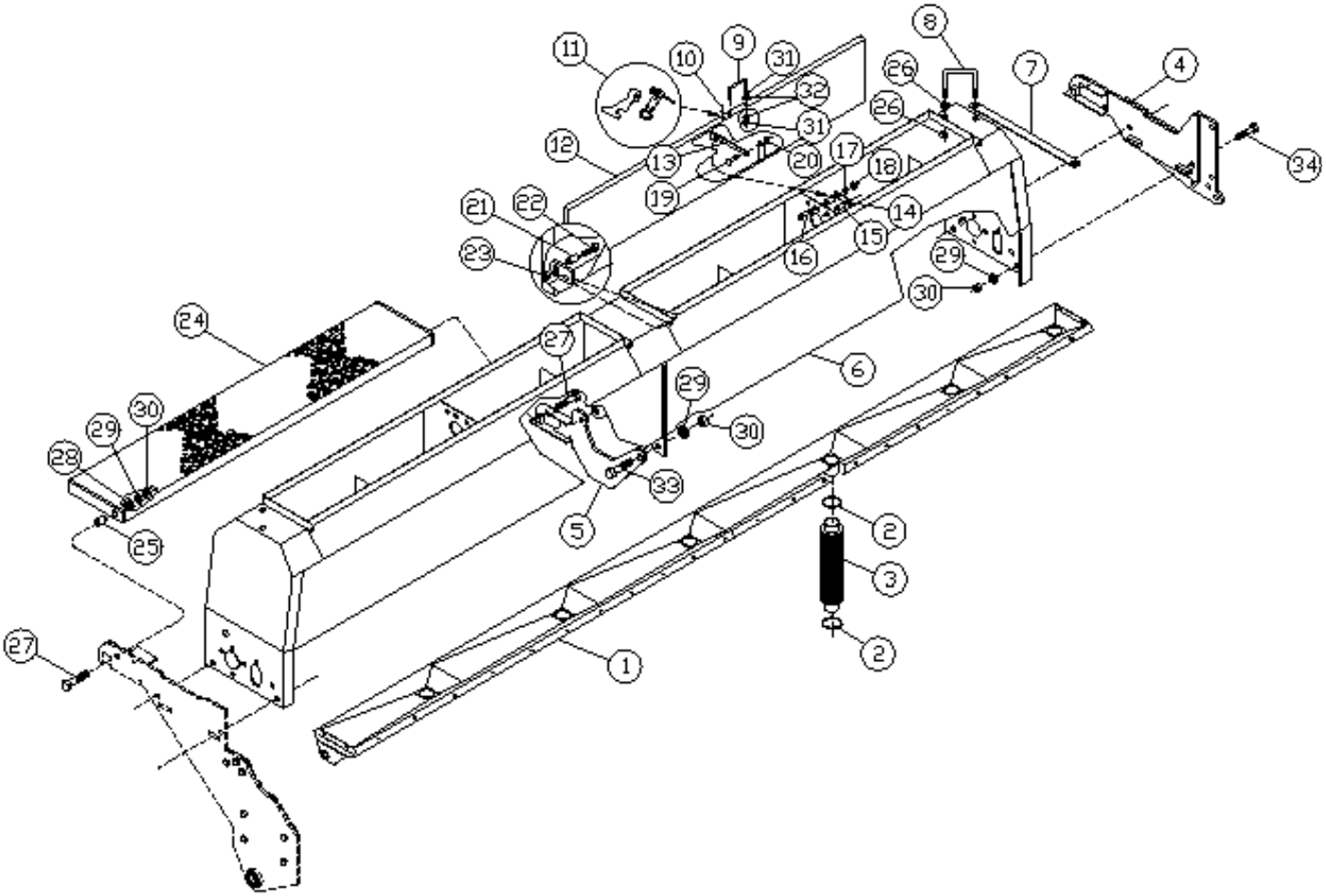

Label	Part #	Description	Label	Part #	Description
1	967083	PLANTER DRILL 30' X 30" BOX BOTTOM WA. – 7 ½"	17	330050	LOCK WASHER – ¼"
*	968164	PLANTER DRILL 30' X 30" BOX BOTTOM WA. – 10"	18	332205	HEX NUT – ¼"
2	606392	HOSE CLAMP 2 ½" WORM DRIVE	19	01011600	HHCS 5/16" X 1 ¼"
3	571406	PLANTER FEED TUBE	20	331611	HEX NYLOCK – 5/16"
4	967158	BOX END WALKBOARD BRACKET – LEFT (SHOWN)	21	149385	LID BUSHING
*	967166	BOX END WALKBOARD BRACKET – RIGHT	22	335703	HHCS 3/8" X 1 ½"
5	967190	CENTER WALKBOARD BRACKET – RIGHT (SHOWN)	23	330837	HEX NYLOCK – 3/8"
*	967208	CENTER WALKBOARD BRACKET – LEFT	24	957290	WALKBOARD
6	959213	WELDED FERT. BOX (PAINTED)	25	150086	WALKBOARD BUSHING
7	259713	BOX STRAP	26	330571	HEX NUT – 5/8"
8	335737	U-BOLT 5/8" X 4" X 3 ¼"	27	01029800	HHCS ½" X 1"
9	308122	BOX LID HANDLE	28	330159	FLAT WASHER – ½"
10	601989	POP RIVET 3/16" X ¼"	29	330142	LOCK WASHER – ½"
11	570341	LID LATCH W/HOOK	30	330134	HEX NUT – ½"
12	957928	BOX LID (PAINTED)	31	330811	HEX NUT – 5/16"
13	221317	LID LATCH BRACKET	32	330852	FLAT WASHER – 5/16"
14	190942	LID LATCH	33	335240	HHCS ½" X 1 ¾"
15	145144	LID LATCH SPOOL	34	01147800	HHCS ½" X 1 ½"
16	335133	HHCS ¼" X 1 ¾"			

OPENER ASSEMBLIES (DOES NOT INCLUDE ITEMS 55, 68, 69 & 70)

871962 PLANTER OPENER – SHORT RIGHT
871970 PLANTER OPENER – SHORT LEFT
871988 PLANTER OPENER – LONG RIGHT
871996 PLANTER OPENER – LONG LEFT

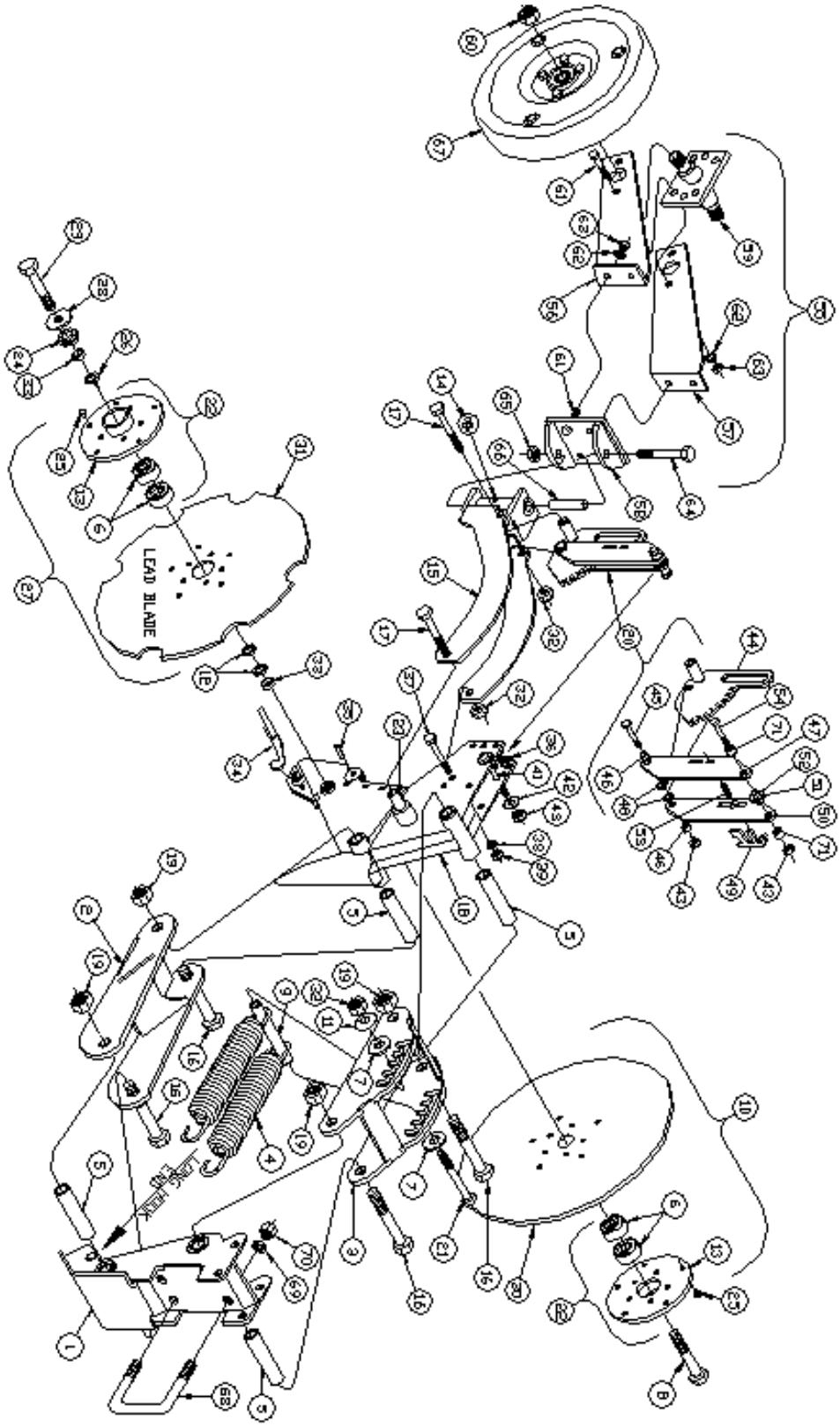

Planter Drill Opener Repair Parts (continued)

Label	Part #	Description
1	964692	OPENER MOUNT
2	964726	OPENER LOWER ARM WA.
3	964718	OPENER UPPER ARM WA.
4	502294	OPENER EXTENSION SPRING
5	152561	OPENER UPPER & LOWER ARM BUSH
6	401042	BEARING
7	330159	WASHER ½" FLAT
8	338277	5/8 X 2 ½" HHCS (GR. 5) – LEFT HAND
9	152611	SPRING BUSHING
10	874081	DISC BLADE ASSY. (PLAIN) W/21 EDGE (INCLUDES ITEMS 30, 22, & 25)
11	502302	CURVED SPRING WASHER
12	333351	1 1/8" X 5/8" MACHINE BUSHING (18 GA.)
13	551200	BEARING FLANGE
14	604660	.250 – 28 X .562" SELF-TAP ZERK
15	964908	PRESSWHEEL SWIVEL BRACKET
17	337865	½" X 4 ½" HHCS (GR. 8)
18	968024	PLANTER SHANK OPENER LONG LEFT
*	968016	PLANTER SHANK OPENER LONG RIGHT
*	967851	PLANTER SHANK OPENER SHORT LEFT
*	967844	PLANTER SHANK OPENER SHORT RIGHT
19	330316	NUT ¾" HEX NYLOCK
20	873307	PLANTER QUADRANT SUB-ASSEMBLY
21	337972	HHCS ½" X 6" (GR. 8)
22	633891	BEARING & FLANGE SUB-ASSEMBLY (INCLUDES ITEMS 6 & 13)
23	153601	BUSHING (PURCHASED) (3.594)
24	400747	NEOPRENE DUST SEAL
25	603084	RIVET 5/16 X 5/8" BUTTON HEAD
26	330720	1 1/8" X 5/8" MACHINE BUSHING (14 GA.)
27	845925	DOUBLE DISC BLADE ASSY. (6 NOTCH – INCLUDES ITEMS 30, 22, & 25)
28	330183	5/8" FLAT WASHER
29	06957500	5/8 X 2 ½" HHCS (GR. 5)
30	502351	16" BLADE – 4MM (PLAIN) W/#21 EDGE
31	501437	16" BLADE – 4MM (NOTCHED)
32	03223500	NUT ½" REVERSIBLE LOCK (GR. 8)
33	606558	BUSHING 1" O.D.
34	967893	SCRAPER WELDMENT
35	338244	ROLL PIN – ¼ X 1"
36	225714	SPACER – 3/8 X ½" I.D. X 1" O.D.
37	331850	HHCS ¼" X 2 ½"
38	330050	LOCK WASHER – ¼"
39	332205	HEX NUT – ¼"
40	331884	HHCS 3/8" X 2 ½"
41	330886	HHCS 3/8" X 3"
42	330894	FLAT WASHER – 3/8"
43	330837	NUT 3/8" HEX NYLOCK
44	964874	QUADRANT HANDLE
45	335703	HHCS 3/8" X 1 ½"
46	149393	BUSHING ½" X 3/8" X 5/16"
47	224014	QUADRANT STRAP RIGHT
48	337063	WASHER – .500 X .688 X .030 NYLON
49	224030	QUADRANT LOCK LATCH
50	224022	QUADRANT STRAP LEFT
51	604504	GROMMET ½ X 1
52	149385	BUSHING ½" X 3/8" X 25/32"
53	502310	SPRING 1 ¼"
54	335877	HHCS 3/8" X 1 3/4"
55	874271	2 X 13 DUAL PRESSWHEEL ASSEMBLY
56	229351	PRESSWHEEL BRACKET PLATE – RIGHT
57	229377	PRESSWHEEL BRACKET PLATE – LEFT
58	968040	PRESSWHEEL MOUNT BRACKET WELDMENT
59	923607	DUAL PRESSWHEEL SPINDLE
60	01572700	NUT – 5/8" HEX NYLOCK
61	335703	HHCS 3/8" X 1 ½"
62	330043	LOCKWASHER – 3/8"
63	330035	HEX NUT – 3/8"
64	338053	HHCS ½" X 5" (GR. 8)
65	03223500	REVERSIBLE LOCK NUT – ½" (GR. 8)
66	153601	BUSHING .750 X .510 X 3.594
*	530667	PRESSWHEEL 2 X 13 PEAKED W/ SMOOTH SIDES
67	530717	PRESSWHEEL 2 X 13 W/ SMOOTH SIDES
68	337147	U-BOLT 5/8" X 4" X 5" (4 X 4 TUBE)
*	335737	U-BOLT 5/8" X 4" X 3 ¼" (2 X 4 TUBE)
69	330878	LOCKWASHER – 5/8"
70	330571	HEX NUT – 5/8"
71	154369	BUSHING 5/8" X 13/32" X 15/32"

(Drawing reprinted for convenience)

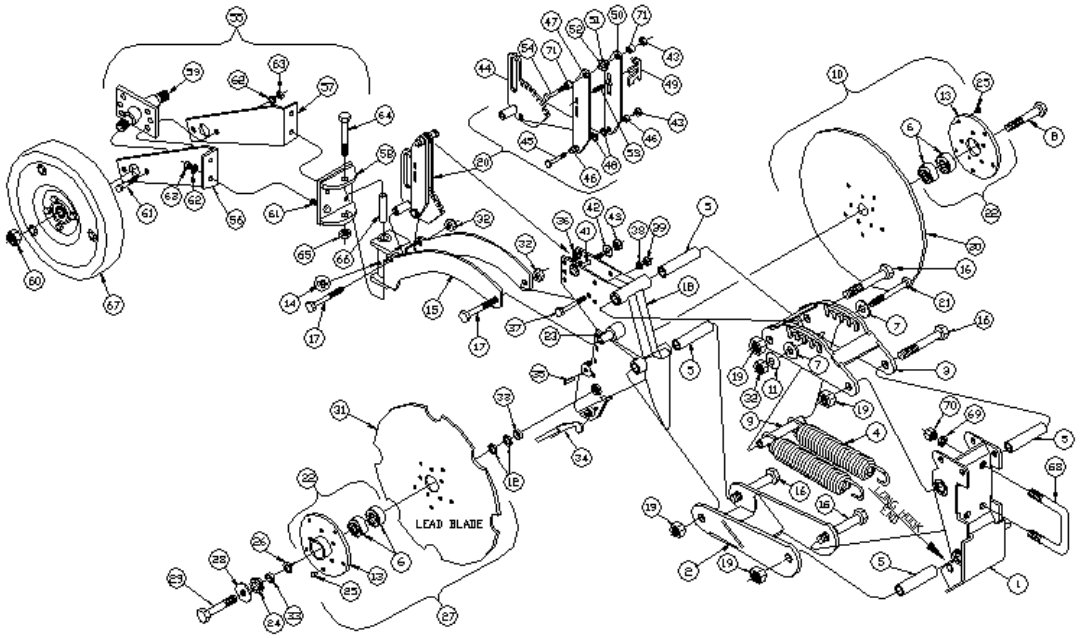

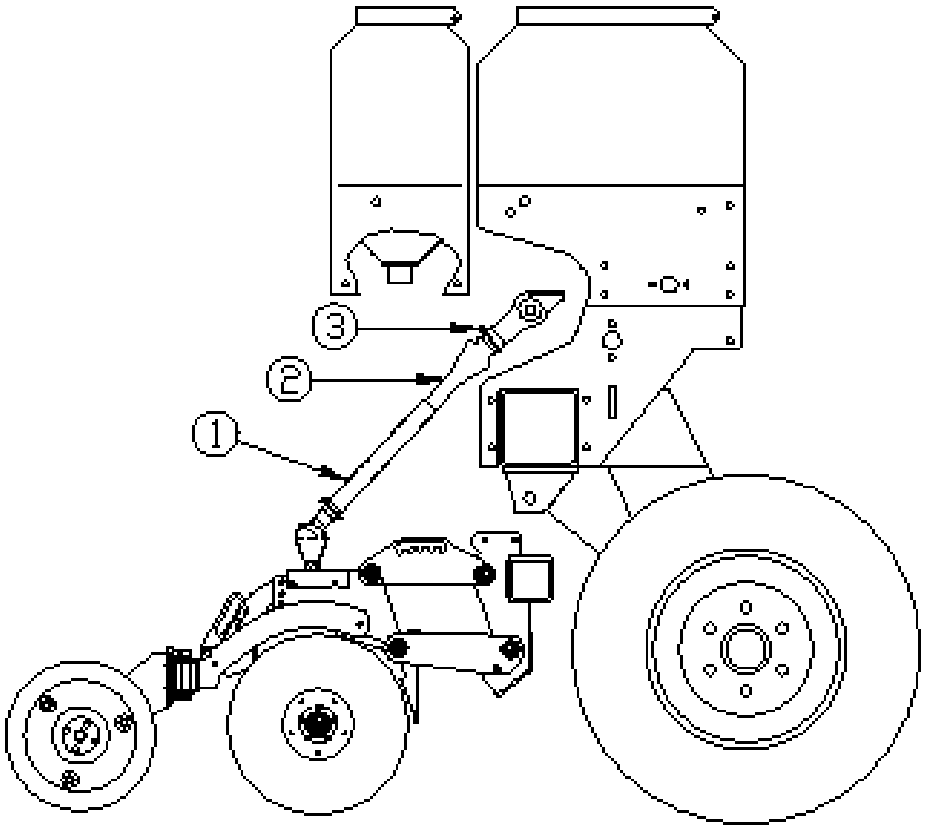

Label	Part #	Description
1	874206	SEED TUBE ASSEMBLY – PLANTER TO DRILL
2	571331	UPPER SEED TUBE – 20”
3	604777	CLAMP 1.375 X .162 (A-22)

Blade Assembly – Plain 16” (4mm) Repair Parts

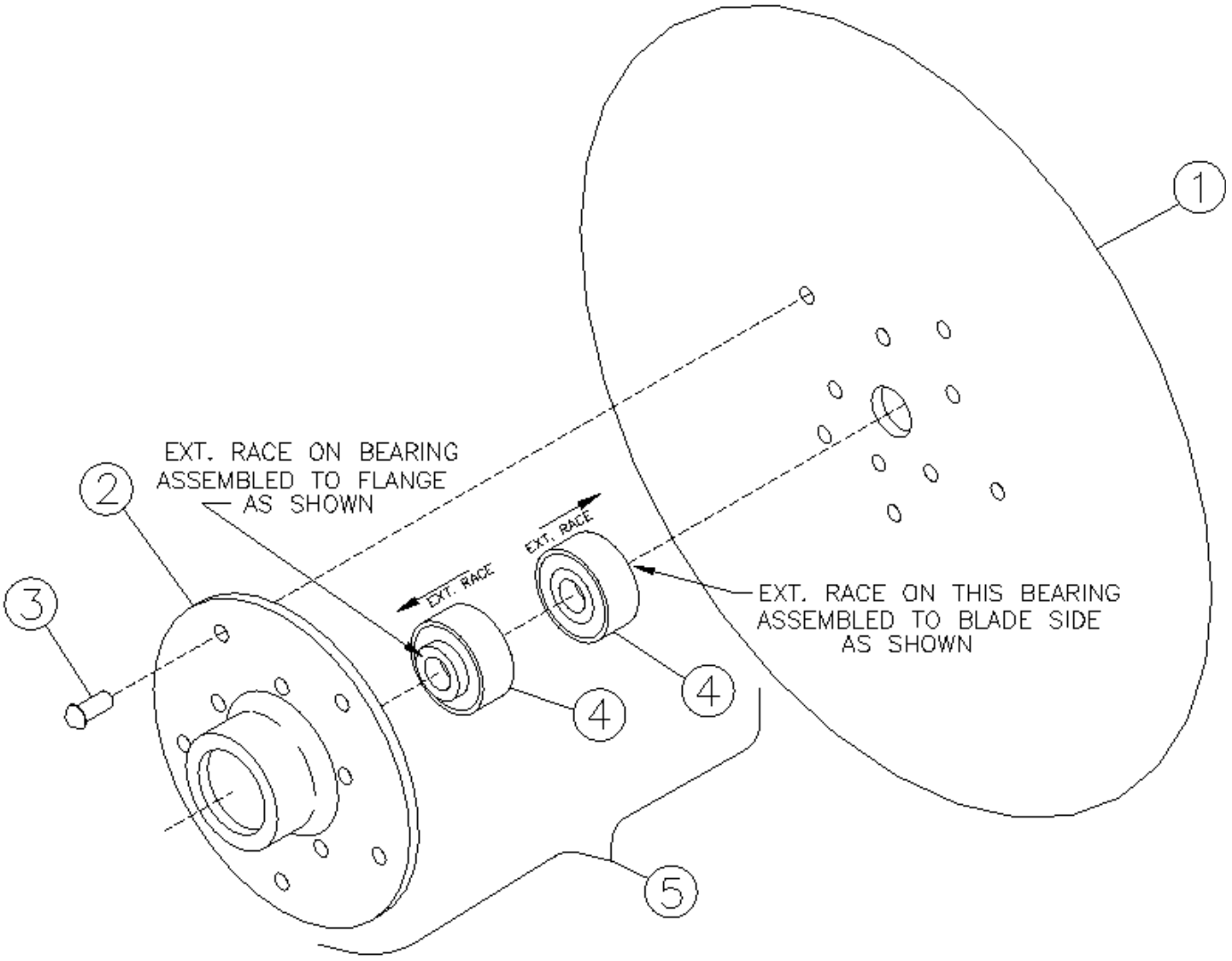

Label	Part #	Description
1	502351	16” BLADE – 4MM (PLAIN) W/#21 EDGE
2	551200	BEARING FLANGE CAST
3	603084	5/16” X 5/8” BUTTON HEAD RIVET
4	401042	BEARING 204RY2
5	636761	BEARING & FLANGE SUB-ASSEMBLY

Finger Tine Cover Assembly

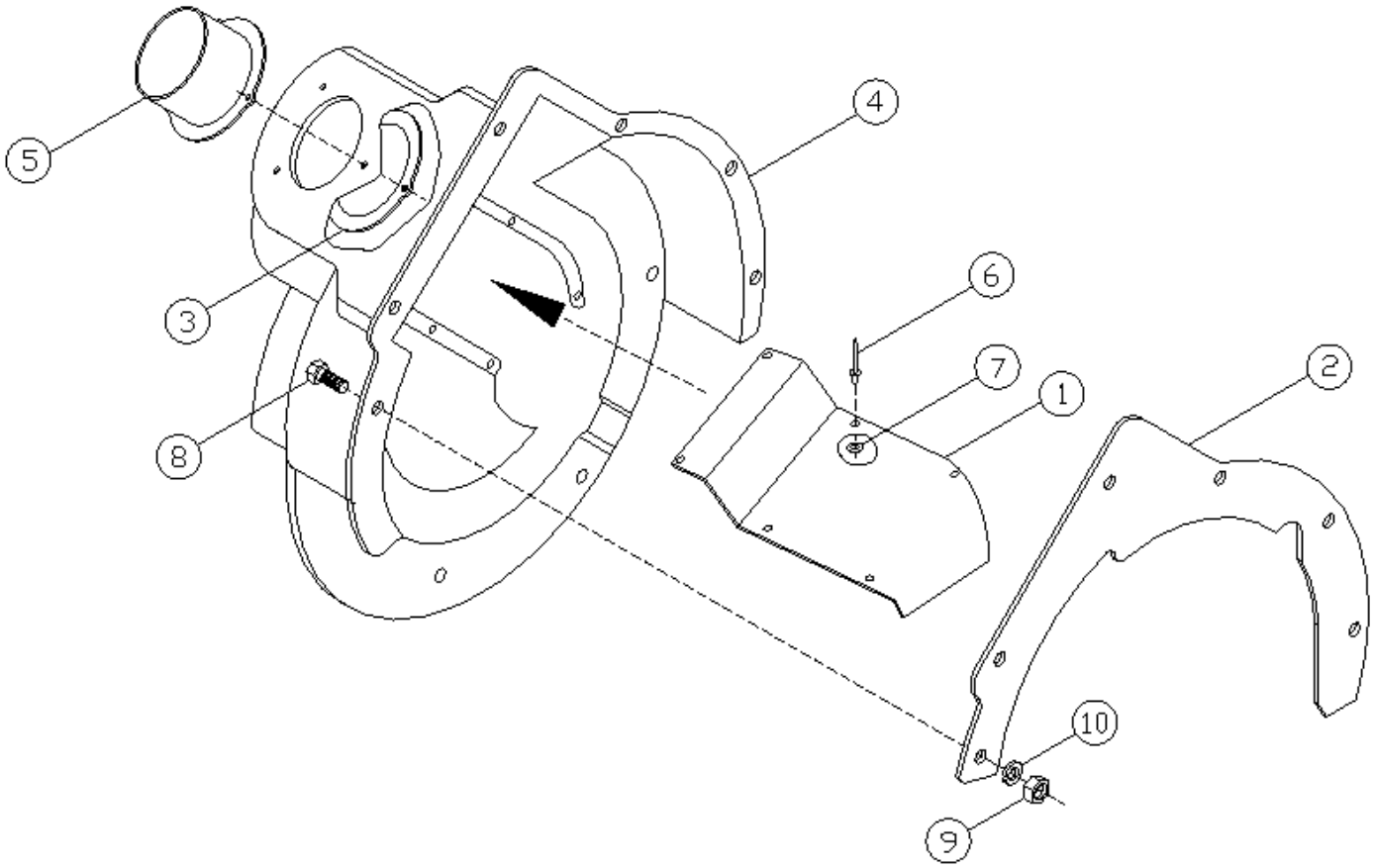

Label	Part #	Description
1	264945	SEED SHIELD
2	265397	12 GA. SUPPORT PLATE
3	265405	SEED TUBE BACKUP PLATE – 16 GA.
4	571414	FINGER TINE COVER
5	967075	COVER SEED TUBE
6	338293	POP RIVET 1/8” X 1/8”
7	338301	POP RIVET 1/8” X ¼”
8	01057900	HHCS – ¼” X ¾”
9	332205	NUT – ¼” HEX
10	330050	WASHER – ¼” LOCK

Planter Idler Arm Assembly & 7/8” Hex Bearing Mount Assembly

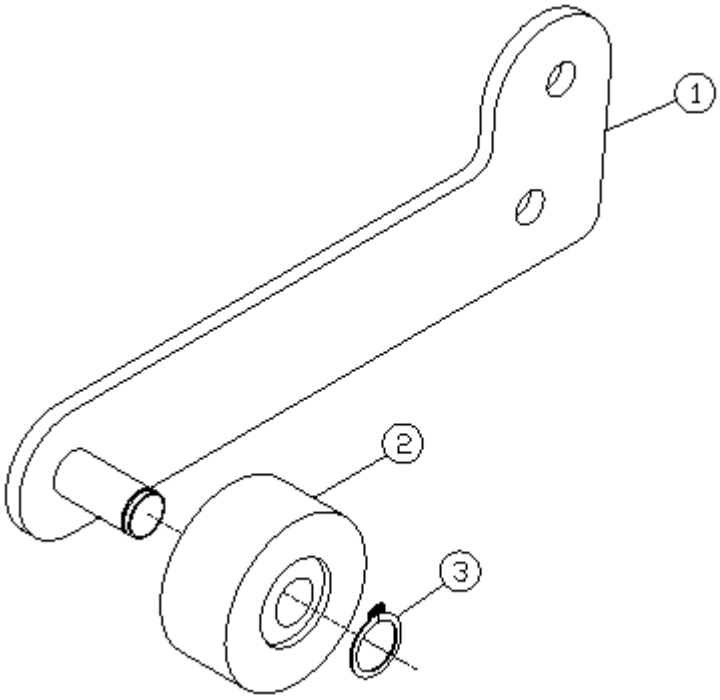

Planter Idler Arm Assembly

Label	Part #	Description
1	966440	IDLER ARM
2	571380	NYLON IDLER
3	607259	EXTERNAL SNAP RING

7/8” Hex Bearing Mount Assembly

Label	Part #	Description
1	226365	BEARING MOUNT
2	403444	HEX BEARING – 7/8”
3	403436	FLANGE PAIR
4	01047000	CARRIAGE BOLT – 5/16” X 1”
5	331611	HEX NYLOCK NUT – 5/16”

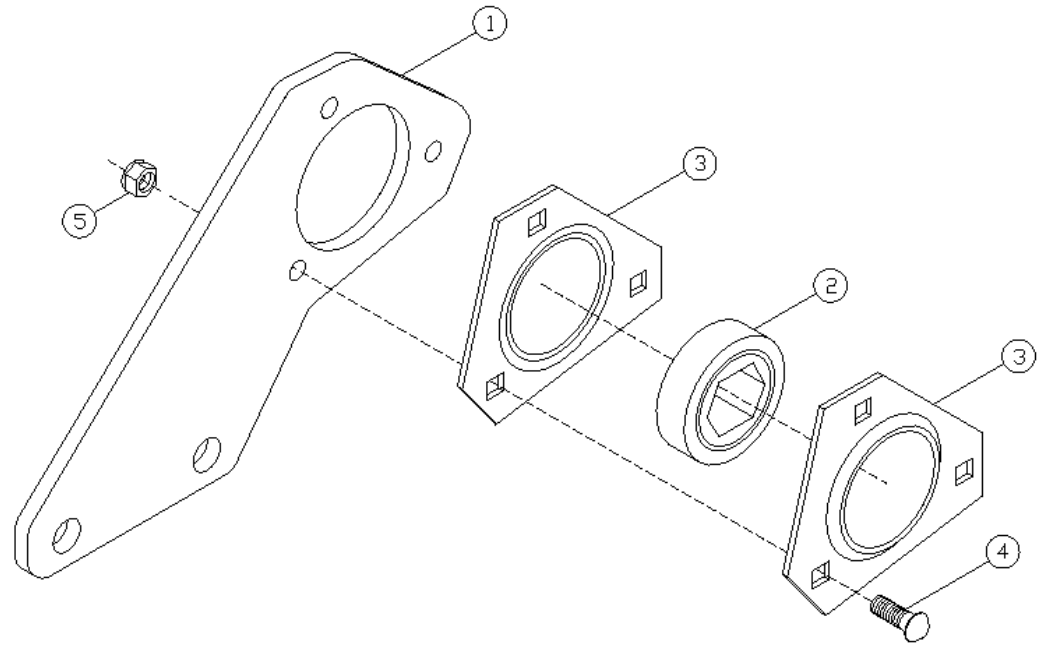

4030 Planter Drill Left Wing Repair Parts

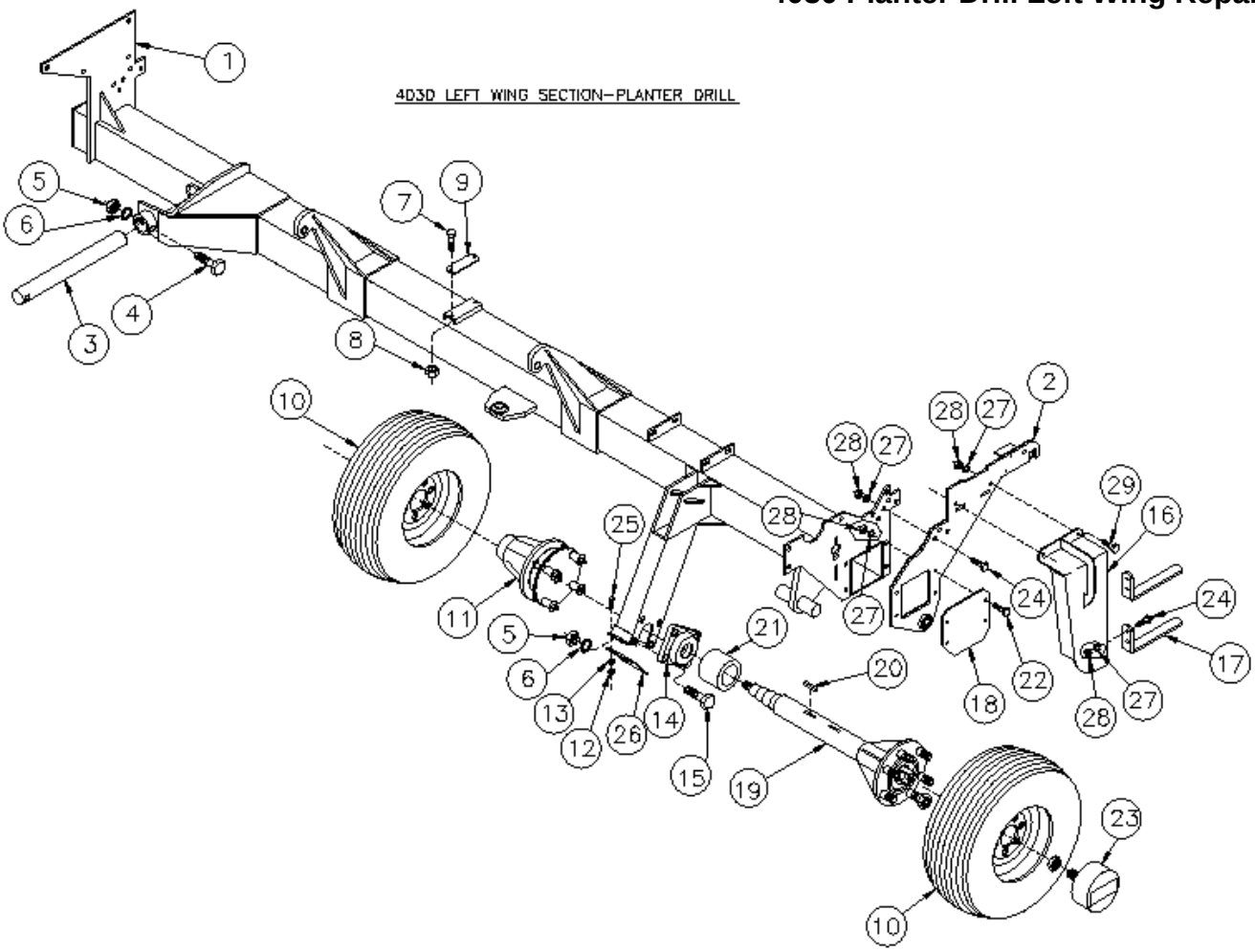

Label	Part #	Description
1	961789	4030 30” LEFT WING FRAME
2	967117	BOX END WALKBOARD BRACKET – LEFT
3	311316	HINGE PIN
4	335182	HHCS 5/8” X 4 ½” (GR. 5)
5	330571	NUT 5/8” HEX
6	330878	WASHER 5/8” LOCK
7	335877	HHCS 3/8” X 1 ¾” (GR. 5)
8	330837	NUT 3/8” HEX NYLOCK
9	217729	HOSE CARRIER BOLT PLATE
10	815175	MOUNTED TIRE 11L 8 PLY 6B
11	870196	CLUTCH ASSY. W/ HUB I/BOLTS
12	332205	NUT ¼” HEX
13	330050	WASHER ¼ LOCK
14	403279	BEARING 2” 4B FLANGE
*	403287	BEARING INSERT
15	01071000	HHCS 5/8” X 2” (GR. 5)

Label	Part #	Description
16	967182	STEP MOUNT LEFT
17	221515	DRILL STEP
18	958173	FRAME END CAP – PAINTED
19	958264	WING WHEEL SPINDLE
20	310656	KEY 3/16” X 1 ½”
21	151787	SPINDLE BUSHING
22	331926	HHCS ½ X 2 (GR. 5)
23	603787	ACRE COUNTER – 200 TO 1 (30’ AP & MT)
24	01147800	HHCS ½” X 1 ½” (GR. 5)
25	01057900	HHCS ¼ X ¾ (GR. 5)
26	221374	WHEEL ARM CHAIN GUARD
27	330142	WASHER ½” LOCK
28	330134	NUT ½” HEX
29	01180900	HHCS ½” X 1 ¼” (GR. 5)

4030 Planter Drill

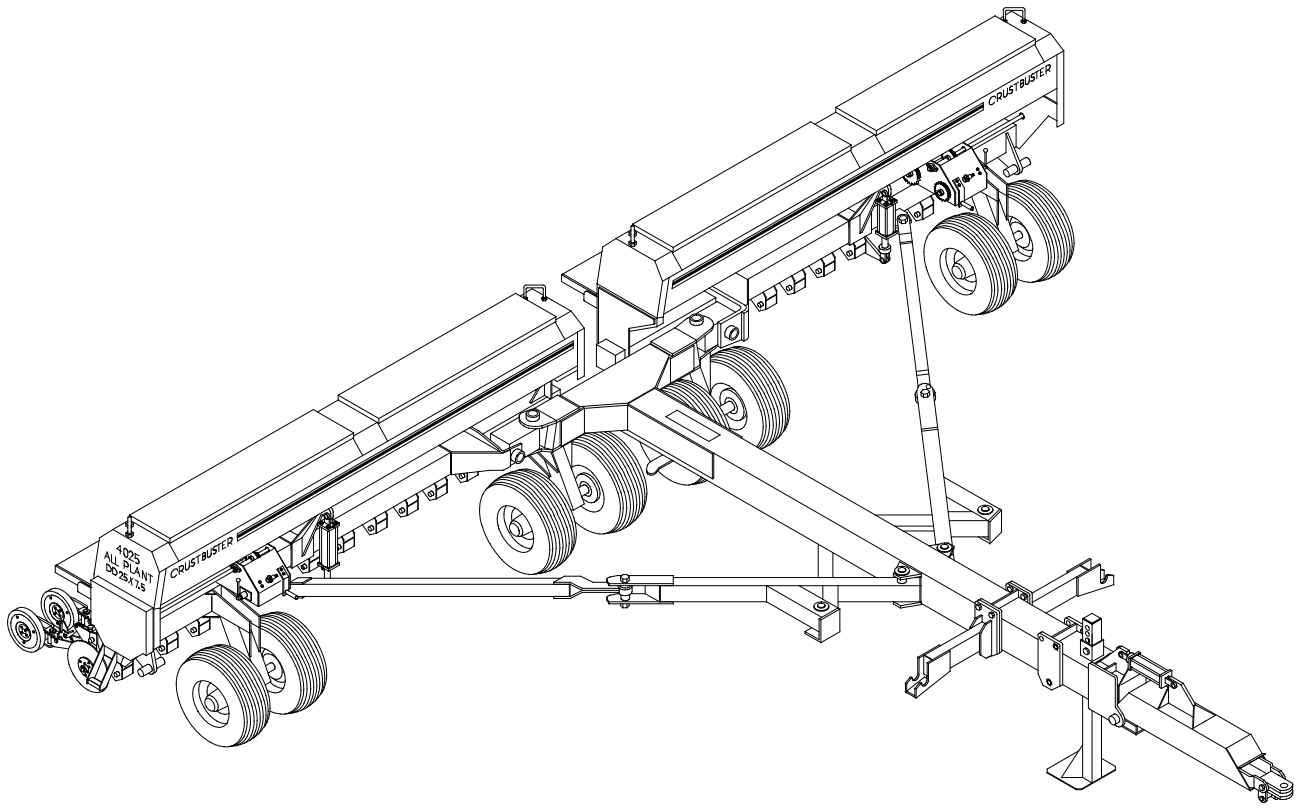

Repair & Maintenance Tips

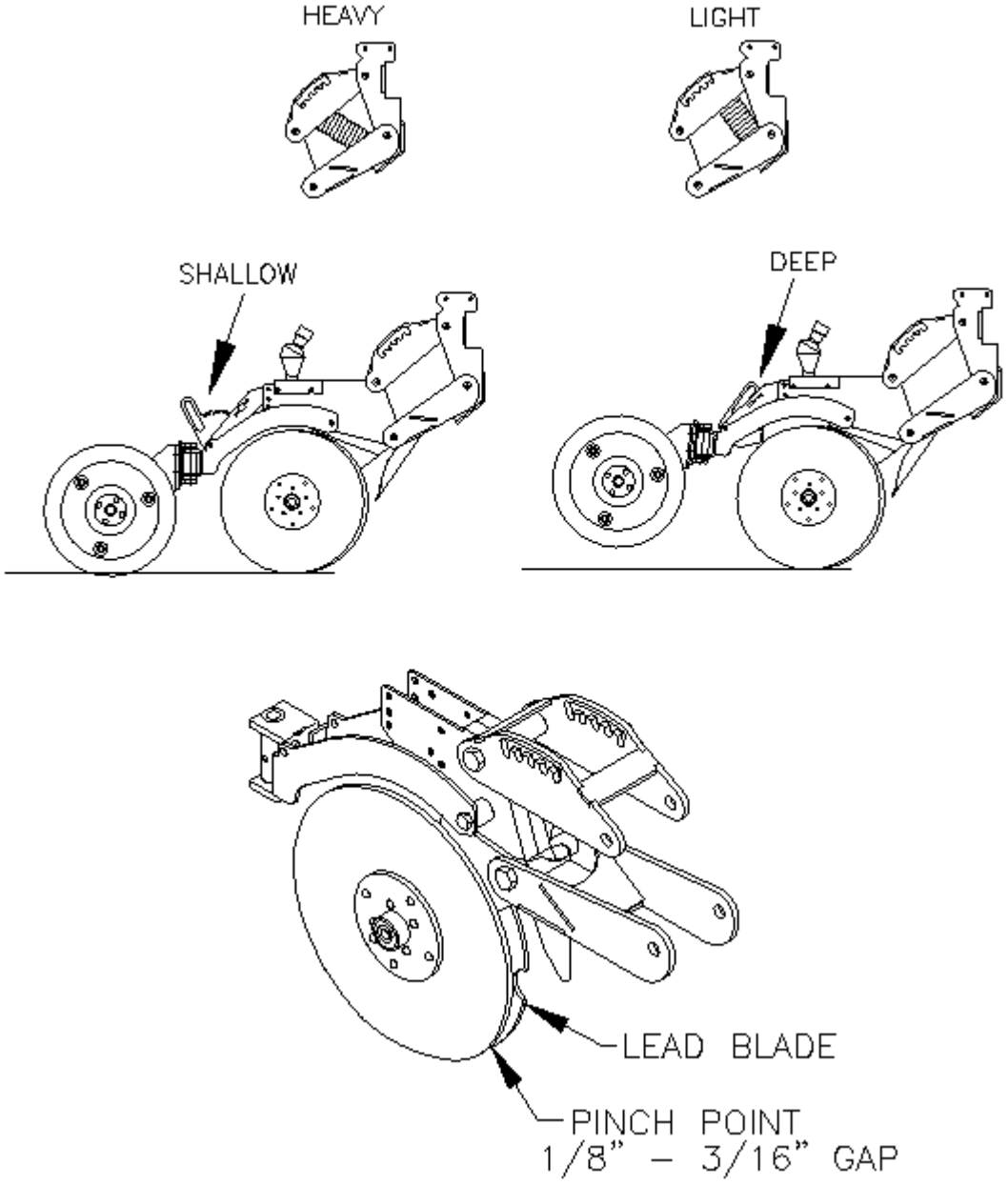
HEAVY
LIGHT
SHALLOW
DEEP
LEAD BLADE
PINCH POINT
1/8" – 3/16" GAP

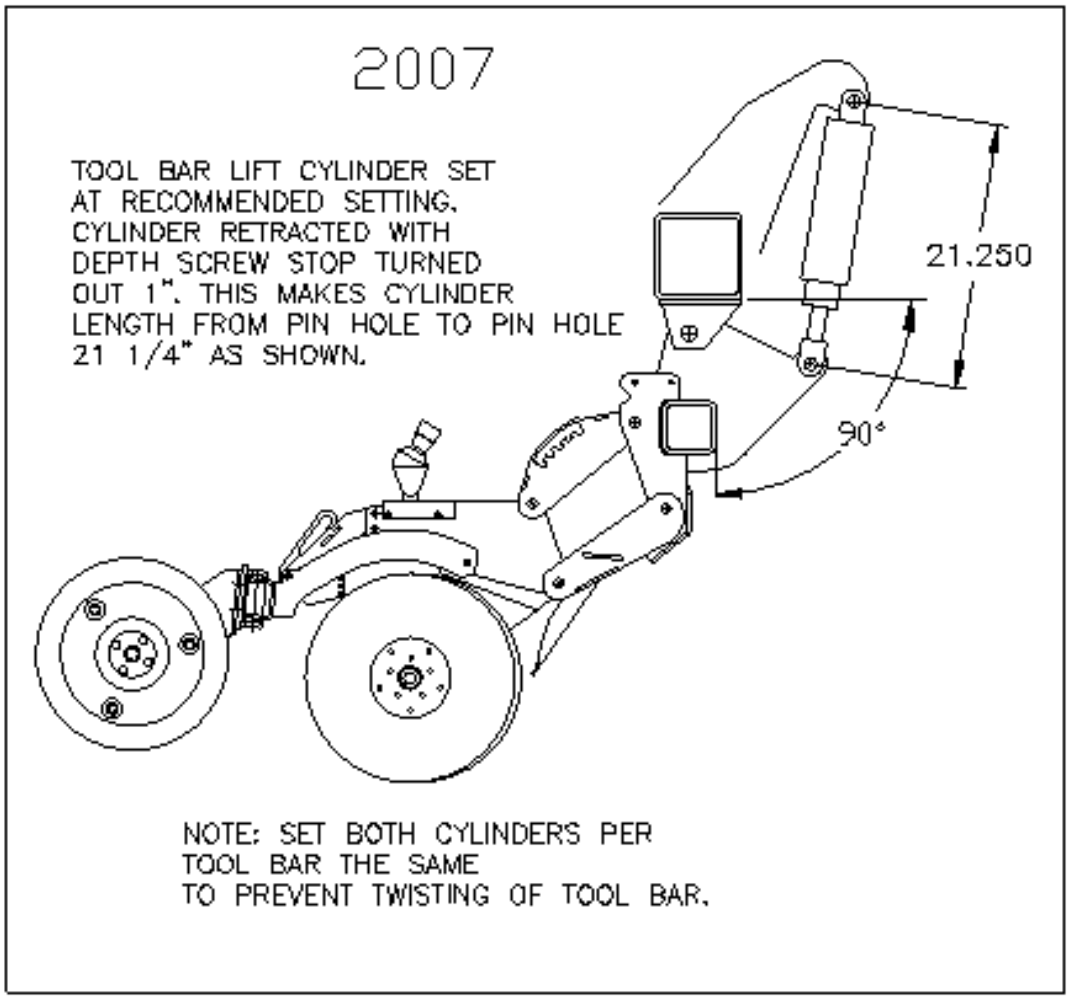
2007
TOOL BAR LIFT CYLINDER SET AT RECOMMENDED SETTING. CYLINDER RETRACTED WITH DEPTH SCREW STOP TURNED OUT 1". THIS MAKES CYLINDER LENGTH FROM PIN HOLE TO PIN HOLE 21 1/4" AS SHOWN.
21.250
90°
NOTE: SET BOTH CYLINDERS PER TOOL BAR THE SAME TO PREVENT TWISTING OF TOOL BAR.

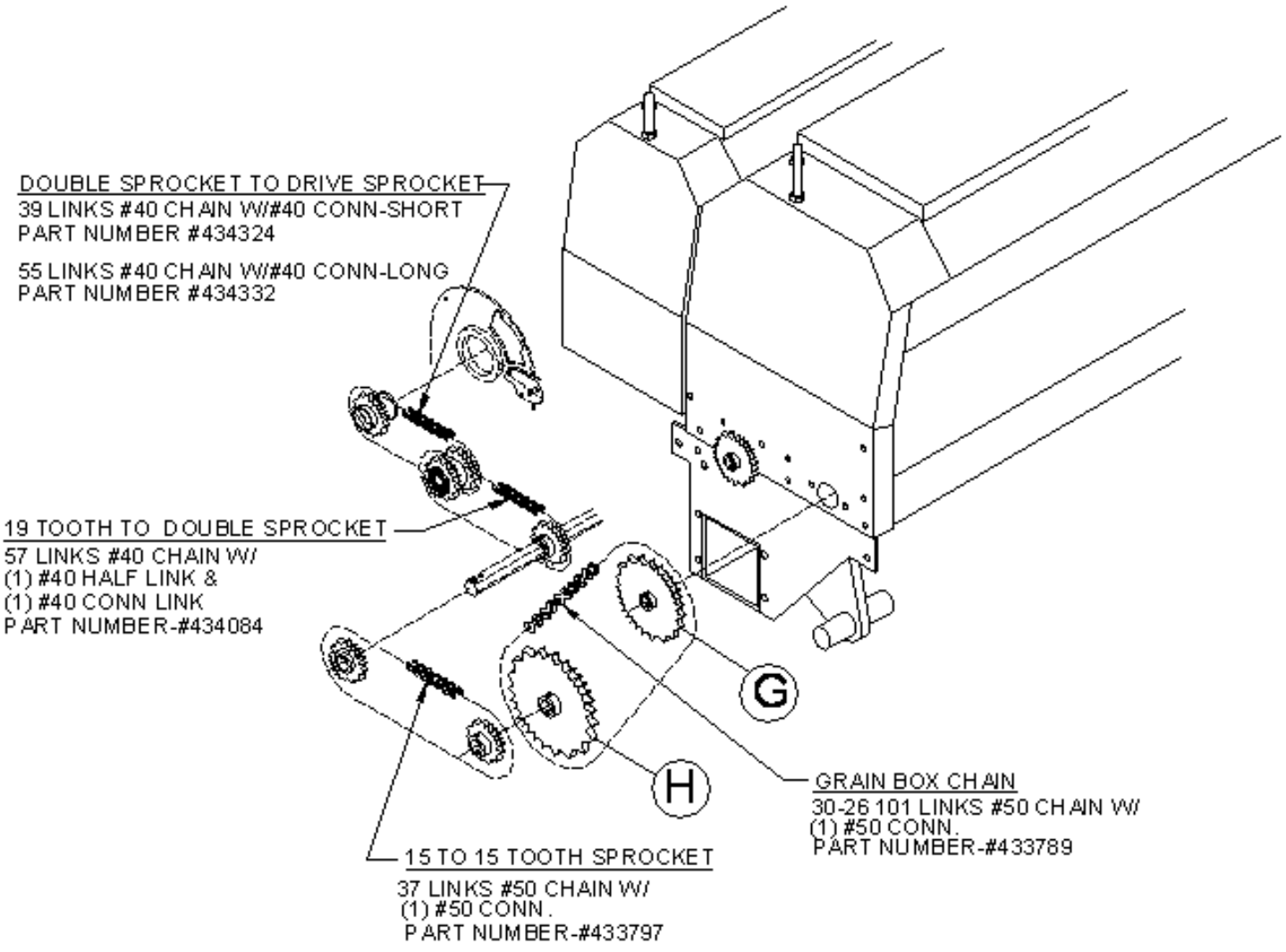
DOUBLE SPROCKET TO DRIVE SPROCKET
39 LINKS #40 CHAIN W/#40 CONN-SHORT
PART NUMBER #434324
55 LINKS #40 CHAIN W/#40 CONN-LONG
PART NUMBER #434332
19 TOOTH TO DOUBLE SPROCKET
57 LINKS #40 CHAIN W/
(1) #40 HALF LINK &
(1) #40 CONN LINK
PART NUMBER-#434084
G
H
GRAIN BOX CHAIN
30-26 101 LINKS #50 CHAIN W/
(1) #50 CONN.
PART NUMBER-#433789
15 TO 15 TOOTH SPROCKET
37 LINKS #50 CHAIN W/
(1) #50 CONN.
PART NUMBER-#433797

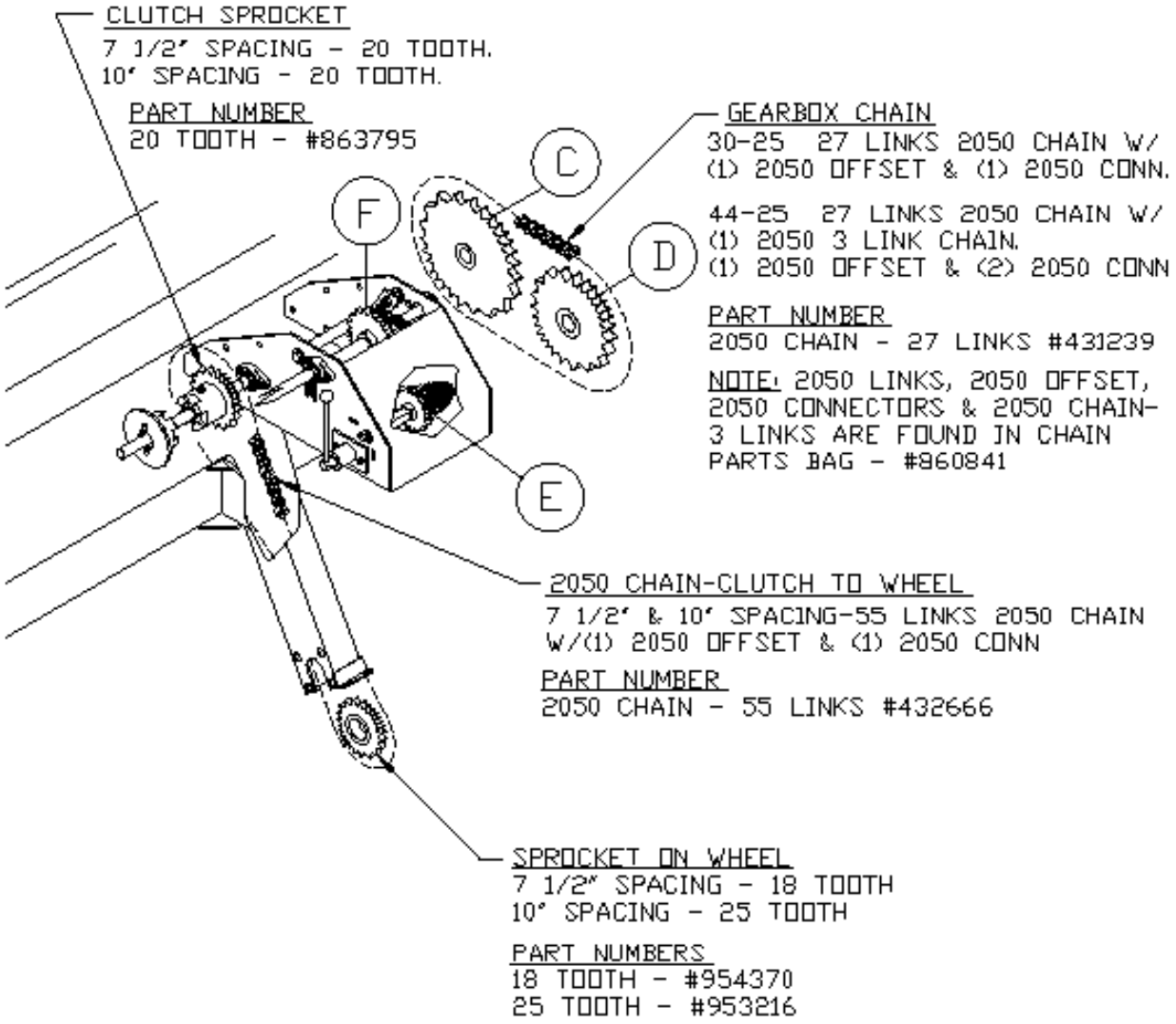
CLUTCH SPROCKET
7 1/2" SPACING - 20 TOOTH.
10" SPACING - 20 TOOTH.
PART NUMBER
20 TOOTH - #863795
GEARBOX CHAIN
30-25 27 LINKS 2050 CHAIN W/
(1) 2050 OFFSET & (1) 2050 CONN.
44-25 27 LINKS 2050 CHAIN W/
(1) 2050 3 LINK CHAIN.
(1) 2050 OFFSET & (2) 2050 CONN
PART NUMBER
2050 CHAIN - 27 LINKS #431239
NOTE: 2050 LINKS, 2050 OFFSET,
2050 CONNECTORS & 2050 CHAIN-
3 LINKS ARE FOUND IN CHAIN
PARTS BAG - #860841
C
D
E
F
2050 CHAIN-CLUTCH TO WHEEL
7 1/2" & 10" SPACING-55 LINKS 2050 CHAIN
W/(1) 2050 OFFSET & (1) 2050 CONN
PART NUMBER
2050 CHAIN - 55 LINKS #432666
SPROCKET ON WHEEL
7 1/2" SPACING - 18 TOOTH
10" SPACING - 25 TOOTH
PART NUMBERS
18 TOOTH - #954370
25 TOOTH - #953216

Planter Drill Lubrication

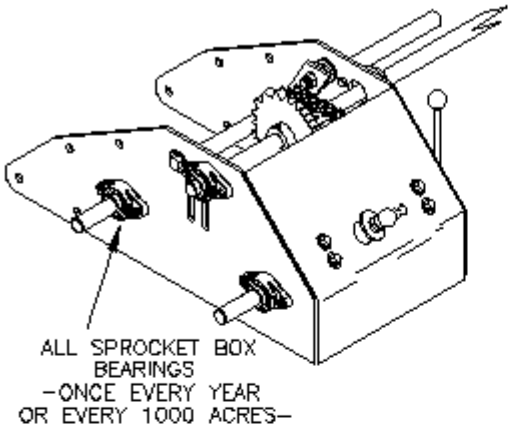

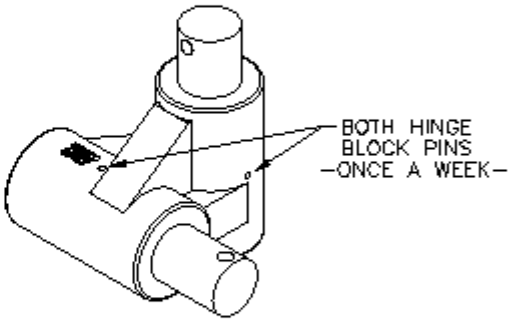

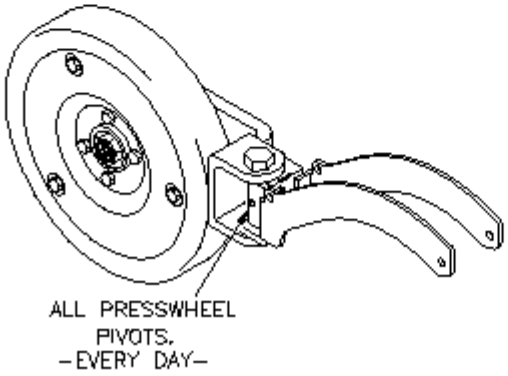

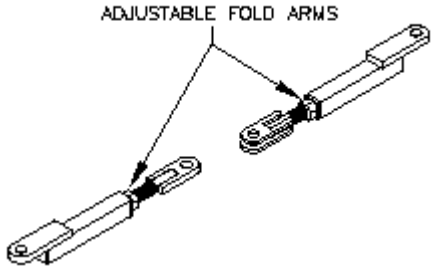

Planter Drill Lubrication (continued)

